Durham University

Durham E-Theses

Tracer investigation of Isotople reactions: A study of a method for the separation of boron isotopee.

Green, Mino

How to cite:

Green, Mino (1951) *Tracer investigation of Isotople reactions: A study of a method for the separation of boron isotopee.*, Durham theses, Durham University. Available at Durham E-Theses Online: http://etheses.dur.ac.uk/9128/

Use policy

The full-text may be used and/or reproduced, and given to third parties in any format or medium, without prior permission or charge, for personal research or study, educational, or not-for-profit purposes provided that:

- a full bibliographic reference is made to the original source
- a link is made to the metadata record in Durham E-Theses
- the full-text is not changed in any way

The full-text must not be sold in any format or medium without the formal permission of the copyright holders.

Please consult the full Durham E-Theses policy for further details.

Academic Support Office, The Palatine Centre, Durham University, Stockton Road, Durham, DH1 3LE
e-mail: e-theses.admin@durham.ac.uk Tel: +44 0191 334 6107
http://etheses.dur.ac.uk

Tracer Investigations of Isotopic Reactions.

A Study of a Method for the Separation of Boron Isotopes.

M. GREEN

The phase exchange process:

$$^{10}BCl_3(l) + {}^{11}BCl_3(g) \rightleftharpoons {}^{11}BCl_3(l) + {}^{10}BCl_3(g)$$

has been examined in a high efficiency packed fractionating column. The relative volatility of the isotopic boron chlorides has been found to be 0.9987(in favour of ^{10}B). A novel method has been developed for assaying the ^{10}B concentration in BCl_3. This method is based upon the large capture cross section of ^{10}B for thermal neutrons as compared with any other nuclide likely to be present. The technique consisted in measuring the neutron transmission through an absorption cell, alternately empty and filled with BCl_3 gas. Standard nuclear physical apparatus and a BF_3-filled proportional counter were used for measuring the neutron intensity.

The value of the equilibrium constant obtained experimentally differs in sense and magnitude from that predicted by Urey from infra-red spectral data(1.014 at the boiling point). This discrepancy has been discussed in the light of a more general theory of the vapour pressure differences of isotopic liquid mixtures, and it has been shown that reasonable agreement is obtained between theory and experiment, if allowance is made for the existence, in the liquid phase, of 'infra-red dispersion forces'(analogous to the London dispersion forces), the magnitudes of which are isotope-dependent.

A THESIS

submitted by

MINO GREEN, B.Sc.

in candidature for the

degree of

DOCTOR OF PHILOSOPHY

in the

UNIVERSITY OF DURHAM.

DURHAM COLLEGES ★ UNIVERSITY OF DURHAM ★
12 NOV 1951
LIBRARY

August, 1951.

TRACER INVESTIGATION OF ISOTOPIC REACTIONS.

A Study of a Method for the Separation of Boron Isotopes.

INDEX.

			PAGE
CHAPTER I	-	Introduction.	1
CHAPTER II	-	Possible Methods of Isotope Separation Applicable to Boron.	4
	1)	Thermal Diffusion	4
	2)	Electromagnetic Separation	5
	3)	Diffusion Separation	5
	4)	Exchange Equilibria	6
CHAPTER III	-	Distillation.	13
	1)	Cohen's Theory of Isotope Separation in Packed Columns	13
	2)	Packing Efficiency	16
	3)	Column Design	18
	4)	Still-pot Design	19
	5)	Pre-flooding	20
	6)	Vapour Velocity	21
	7)	Take-off Section	21
CHAPTER IV	-	Fractionating Apparatus.	23
	1)	Packing Efficiency	23
	2)	Column Design	26
	3)	Still-pot Design	28
	4)	Pre-flooding Valve	30
	5)	Condenser Assembly	31
	6)	Circulating & Refrigeration System	32
	7)	Alarm System	34
	8)	Feedback Pump	35
	9)	Operation of Column	36
CHAPTER V	-	Preparation and Purification of Boron Trichloride.	38
	1)	Shafran's Method of Preparation	38
	2)	Purification	40
	3)	Purity of Product	42
CHAPTER VI	-	Determination of the Relative Isotope Ratio of Boron.	45
	1)	Density Method	45
	2)	Chemical Method	46
	3)	Mass Spectrometric Method	47
	4)	Neutron Absorption Method	49

PAGE

CHAPTER VII - Results. 56

1) Reproducibility of Counting Measurements 56
2) Relationship Between Neutron Absorption & ^{10}B Concentration 58
3) Results of Distillation 60
4) Calculation of α and Column Platage 62
5) Errors in Results 63

CHAPTER VIII - Discussion. 64

A) Practical Aspects 64
B) Theoretical Implications 66
1) Evaluation of Configurational Partition Function 68
2) Application to Isotopic Exchange Reactions 73
3) Application to the Calculation of Vapour Pressure Ratios of Isotopic Substances 75
4) Quantitative Test of Theory 75
5) Estimation of the Interaction Energy 78
6) Estimation of Oscillating Dipole Amplitudes 80
7) Calculation of Interaction Energy 83

REFERENCES (iii)

I.

INTRODUCTION.

In recent years isotopic tracers for nearly all the chemical elements have become available. In the case of the lighter elements there is often a choice between radioactive tracers and enriched stable isotopes. A striking exception is the element boron; the radioactive boron isotopes have half lives which are much too short to be of any use in chemical studies (e.g. $^{12}_{5}B$, 0.022 sec.), and only milligram quantities of stable isotopes are available, at a considerable price, from an electromagnetic separation plant.

Both nuclear and chemical applications of much interest exist for separated isotopes of boron. ^{10}B is of considerable application in neutron physics where use can be made of the slow neutron induced reaction:

$$^{10}_{5}B + ^{1}_{0}n \longrightarrow ^{4}_{2}He + ^{7}_{3}Li$$

for which the nuclear cross section is very large ($\sim$3000 x 10^{-24}cm.^{2}). Also it could be of great use in the investigation of the chemical reactions of, for example, the boron hydrides. It was therefore considered worth while to investigate the possible methods of separation of boron isotopes, with a view to the production of usable quantities of enriched material.

It will appear from the discussion in Chapter II that the most promising method for the separation of boron isotopes, on

a laboratory scale, was by fractional distillation of boron trichloride, and this provided an additional reason for carrying out this investigation. Natural boron contains a comparatively high proportion of the less abundant isotope (81.6%, ^{11}B; 18.4% ^{10}B), and as a result both isotopes are amenable to spectroscopic investigation. This has made it possible to evaluate the thermodynamic functions of both isotopes in the condensed phase and in the gas phase, from spectral data; boron trichloride is, in fact, almost the only substance for which such experimental data are available for both isotopes. Use may be made of the Teller-Redlich rule to evaluate the data for the rare isotope in other less favourable cases, although the exact validity of this rule when applied to the condensed phase is open to some doubt. The boron trichloride system, therefore, provided an interesting experimental check of the basis of calculation of vapour pressure differences from molecular frequency data.

Some encouragement in this approach can be drawn from observations of natural variations in the atomic weight of boron. Briscoe and Robinson and their co-workers (1) used the density of boron trichloride, prepared from boron-minerals obtained from different geological deposits, as a measure of the $^{11}B/^{10}B$ ratio. They found differences in the density corresponding to as much as 3½% in the isotopic ratio. This work has recently been extended by Thode and his collaborators

(2), who arrived at similar conclusions as a result of the mass spectrometric assay of boron trifluoride.

The differences in the values obtained for the $^{11}B/^{10}B$ ratio, particularly when boron trifluoride has been used as the material for investigation has led a number of workers to suggest that fractionation of the isotopes might result from differing treatments in the purification of various samples. While this suggestion lacks experimental proof, the evidence of Briscoe's and Thode's work remains unchallenged, since purification was carried to the same extent on each sample.

II.

POSSIBLE METHODS OF ISOTOPE SEPARATION APPLICABLE TO BORON.

A number of techniques have been developed for the partial or complete separation of isotopes, but may of them will, in any given case, prove unworkable for one reason or another. The practicability of a method varies widely with the nature of the element involved, the scale of the proposed separation, and the facilities available. The methods which lend themselves to the boron case are discussed below.

1. Thermal Diffusion.

The principle of thermal diffusion discovered independently by Chapman and Enskog, together with the multiplicative effect of the thermal syphon system introduced by Clusius and Dickel, has produced one of the simplest and most reliable separation methods. Liquid systems can be employed, but the difficulties are very much greater than in the gas phase, hence a gaseous compound of boron is required. This compound should be of as low a molecular weight as possible and preferably have only mono-isotopic elements associated with it, so that any isotope effect depends only on the boron. Boron trifluoride seems to be the obvious choice, and this has recently been investigated by Watson, Bucannan and Elder (3) who measured the separation produced in 7 meters of Clusius-Dickel type (hot wire) column. The estimated value of α, deduced from the over-all

separation, was 5.0×10^{-4}, which corresponded to only 0.06 of the separation coefficient calculated from an "elastic spheres" model. It was concluded that α was so small as to make the method rather unattractive. In addition, it seems unlikely that larger values of α will be found for other volatile boron compounds; it would not seem unreasonable to suppose that boron trifluoride has "harder" molecules than the other possible volatile compounds (e.g. BCl_3, Me_3B, etc.). This method was not therefore considered further.

2. Electromagnetic Separation.

Virtually isotopically pure yields of boron in microgram quantities, have been obtained by Yates (4) using a carefully collimated electromagnetic separator and a low voltage arc in a mixture of helium and BF_3 as a source of boron ions. Milligram quantities of separated boron isotopes are available from a large electromagnetic separator at Harwell (5), but this still falls short of the quantities needed for chemical work, and the construction of any larger plant would be a major engineering project.

3. Diffusion Separation.

The Hertz pump technique could conceivably be applied to the boron case. The advantage of such a method is that the properties of gases at low pressures are predictable with a high degree of certainty. The practical difficulties of such

a method are, however, considerable, since it would be necessary to have porous barriers and pumps resistant to the volatile compound selected. Furthermore, since the working pressure for such a process is very low, the yields of material would tend to be rather small, and it is felt that to increase the rate of production would involve a large scale engineering project.

4. Exchange Equilibria.

The pioneer studies of Urey and Rittenberg (6) and Farkas and Farkas (7) established the existence of comparatively large differences in properties between hydrogen and deuterium compounds, and indicated smaller but definite differences in the chemical properties of isotopic compounds of other elements of low atomic weight. Thus in the case of boron isotopes, it appeared that the only feasible line of approach left would be to utilise the slight deviations from unity of the equilibrium constants of isotopic exchange reactions of boron, between two compounds or between two phases, or both. Urey and his collaborators (8) have made extensive use of this type of exchange reaction and have obtained useful results in the case of several of the lighter elements. A typical example of the kind of reaction most favoured is the ammonia-ammonium ion exchange:

$$^{14}NH_3 + {}^{15}NH_4^+ \rightleftharpoons {}^{15}NH_3 + {}^{14}NH_4^+$$

Nearly all such exchange reactions have one point in common, that is, that the element whose separation is desired is associated with different numbers of atoms of another element in the two phases (usually a gas and a liquid). The only analageous reaction for boron would appear to be:-

$$^{10}BF_3 + {}^{11}BF_4^- \rightleftharpoons {}^{11}BF_3 + {}^{10}BF_4^-$$

Whilst this reaction might well give a substantial separation, the extremely corrosive nature of the fluoborate ion would involve an experimental procedure fraught with difficulties.

Urey (8) has considered reactions of the type:-

$$^{10}BX_3 + {}^{11}BY_3 \rightleftharpoons {}^{11}BX_3 + {}^{10}BY_3$$

where X and Y are two different halogens, or the same halogen in molecules in different phases. Reliable vibrational spectral data, necessary for calculating the equilibrium constants of such reaction, are available, owing mainly to the considerable interest shown by spectrocopists in molecules with plane trigonal symmetry. Table I, taken from Urey's paper, but simplified by retaining only those figures for 25°C., is shown below and gives the predicted values of the equilibrium constants for various boron halide exchange reactions.

TABLE I.

	$\frac{^{11}BF_3(g)}{^{10}BF_3(g)}$	$\frac{^{11}BCl_3(g)}{^{10}BCl_3(g)}$	$\frac{^{11}BCl_3(l)}{^{10}BCl_3(l)}$	$\frac{^{11}BBr_3(l)}{^{10}BBr_3(l)}$
$\frac{^{11}BF_3(g)}{^{10}BF_3(g)}$	1	1.090	1.076	1.101
$\frac{^{11}BCl_3(g)}{^{10}BCl_3(g)}$	-	1	1.015	1.010
$\frac{^{11}BCl_3(l)}{^{10}BCl_3(l)}$	-	-	1	1.023
$\frac{^{11}BBr_3(l)}{^{10}BBr_3(l)}$	-	-	-	1

These equilibrium constants are obtained by the usual procedure of calculating the ratio of the vibrational partition functions. It is implicit in these calculations that the total partition function may be represented by the product of the vibrational, rotational, electronic and configurational partition functions and that these are separable. The additional simplifying assumptions made are: that anharmonicity can be neglected; that the rotational levels are "classically" occupied, and thus unable to contribute to the separation; and that

configurational contributions cancel (certainly this will be true in the gas phase). The validity of this last assumption will be discussed in Chapter VIII.

The figures quoted in Table I were obtained by inserting the observed vibrational frequencies into the following expression:-

$$\frac{Q_2}{Q_1} = \prod_i \left[\frac{\omega_2}{\omega_1} \cdot \frac{e^{-\frac{hc\omega_2}{2RT}}}{e^{-\frac{hc\omega_1}{2RT}}} \cdot \frac{1 - e^{-\frac{hc\omega_1}{RT}}}{1 - e^{-\frac{hc\omega_2}{RT}}} \right]^n$$

Where Q is the partition function, ω is the molecular frequency in cm^{-1}, n is the degenerancy of the particular fundamental vibration considered, and the product extends over all fundamental vibrational modes. The application of this treatment to other systems (NH_3 - NH_4^+; SO_2 - HSO_3^- ; CO_2 - HCO_3^- , etc.) has attained a remarkable measure of success, as can be seen from Table XIV of Urey's paper (8).

It can be seen from Table I that the equilibrium constants are all of a workable magnitude. With one exception, however, it would be difficult to conceive of any mechanism whereby these exchange reactions could be converted from a single to a multistage process. In other words, no column packing is yet known which would rapidly and efficiently catalyse the attainment of equilibrium.

The one exception to this case is the $BCl_3(l)$ - $BCl_3(g)$ system which does not involve a chemical equilibrium, but merely a phase exchange process such as forms the basis for all distillations. In principle Urey's method of calculation for such a process should be just as applicable to this system as to any other (provided that the partition functions have been calculated correctly). The value of α quoted appeared sufficiently large to justify an experimental test of the prediction. Such an undertaking was considered to serve two purposes: if α should be as large as predicted, a useful method of obtaining ^{10}B would be available; in either event useful data on the validity of the assumptions implicated in the calculations should be obtained. It is remarkable that, because of the deplorable lack of experimental data for the rarer isotope in the majority of cases, boron trichloride should be the only substance from which at the present time an unambiguous result could be expected.

Table II lists the isotopic systems for which the vapour pressure ratios are experimentally known; in each case the lighter isotope is the more volatile.

TABLE II.

System	Ratio of vapour pressures at the boiling point	Reference
$^{14}N_2/^{15}N_2$	1.0081	(9)
$^{14}NH_3/^{15}NH_3$	1.00246	(10)
NH_3/ND_3	1.110	(11)
$^{16}OH_2/^{18}OH_2$	1.0046	(12)
H_2O/D_2O	1.051	(13)
H_2/D_2	2.975	(14)

No vibrational frequency data for the rare isotope in the liquid phase is available for $^{15}N_2$, $^{15}NH_3$, $^{14}ND_3$, $^{18}OH_2$. In the case of liquid D_2O, which has been available in a virtually isotopically pure state for some time, the situation is so greatly complicated by the existence of some form of hydrogen bonding, as to make the calculation of the partition function ratio hardly possible. Furthermore most of the data on liquid light and heavy waters have been obtained at tempe-

ratures well below the boiling point. No unambiguous test of calculations of vapour pressure ratios is thus available so far, and adds considerable interest to the boron trichloride investigation.

III.

DISTILLATION.

The relative volatility of the $^{11}BCl_3/^{10}BCl_3$ system is almost certainly very near to unity. Thus the branch of distillation theory and practice which is particularly relevant to the present project is that concerned with packed columns of high over-all separating efficiency.

1. Cohen's Theory of Isotope Separation in Packed Columns.

Cohen (15) has given a general treatment of the behaviour of isotopic binary mixtures in packed distillation columns. His conclusions have been of very great use in the choice of the optimum operating conditions and the most favourable column dimensions. The withdrawal of enriched material from the column has been shown to have a very marked effect upon fractionation: Cohen has treated this problem as part of his more general study of packed fractionating columns.

Cohen equated the transfer in and out of a unit length of packed column to obtain the material balance equations:-

$$H \frac{\partial N}{\partial t} = -L \frac{\partial N}{\partial Z'} + H \frac{\delta N}{\delta t}$$

and

$$h \frac{\partial n}{\partial t} = +l \frac{\partial n}{\partial Z'} - H \frac{\delta N}{\delta t}$$

for the liquid and vapour phases, respectively. In these N is the mole fraction of the less volatile component in the

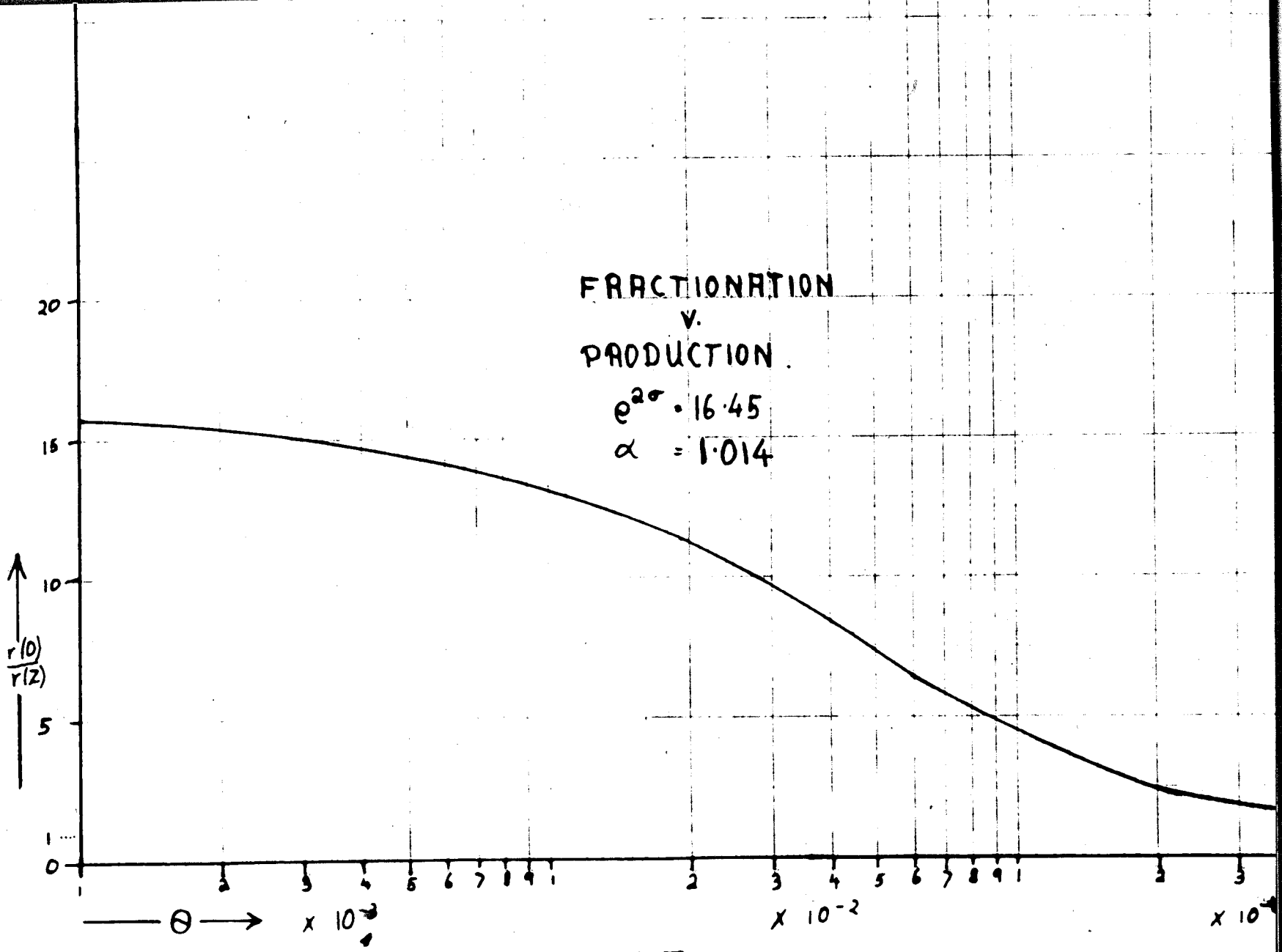
FRACTIONATION
V.
PRODUCTION.
$e^{2\sigma} = 16.45$
$\alpha = 1.014$
20
15
10
5
1
0
$\frac{r(0)}{r(Z)}$
θ
$\times 10^{-3}$
$\times 10^{-2}$
$\times 10^{-1}$

FIG. I

liquid, H is the total liquid hold-up per unit length, L is the liquid reflux rate, while n, h and l are the corresponding quantities in the vapour. The length of the column is Z while Z' is the distance from the top of the column to the element under consideration. The rate of change of the amount of less volatile component in the liquid phase in unit length of column, $H\frac{\partial N}{\partial t}$, can be regarded as the result of two conflicting processes; a contribution from the flow of material down through the column $L\frac{\partial N}{\partial t}$, and the transfer $H\frac{\delta N}{\delta t}$, of material from the gas phase. A similar mass balance must hold for the vapour.

Using the above equations in conjunction with equation:

$$H\frac{\partial N}{\partial t} = -k\left([N][m] - \alpha[M][n]\right) \qquad (1)$$

he obtains the expression:

$$\frac{r(0)}{r(Z)} = \frac{(1-p) + \theta}{(1-p)(e^{-2\sigma})^{1+\alpha\theta} + \theta} \qquad (2)$$

Equation (1) is of the same form as $\delta[N]/\delta t$ for a bimolecular reversible reaction. k is a constant depending on the permeability of the liquid-gas interface, α is the ratio of the partial pressures. $[N]$ and $[n]$ are concentrations (moles/litre) of the less volatile component in liquid and vapour respectively, and $[M]$ and $[m]$ are concentrations of the more volatile components.

$r(0)/r(Z)$ is the fractionation, p is the fraction of the total flow drawn off, $e^{2\sigma}$ is the fractionation produced at column equilibrium with no take-off, and $\theta = p/(1-\alpha)$.

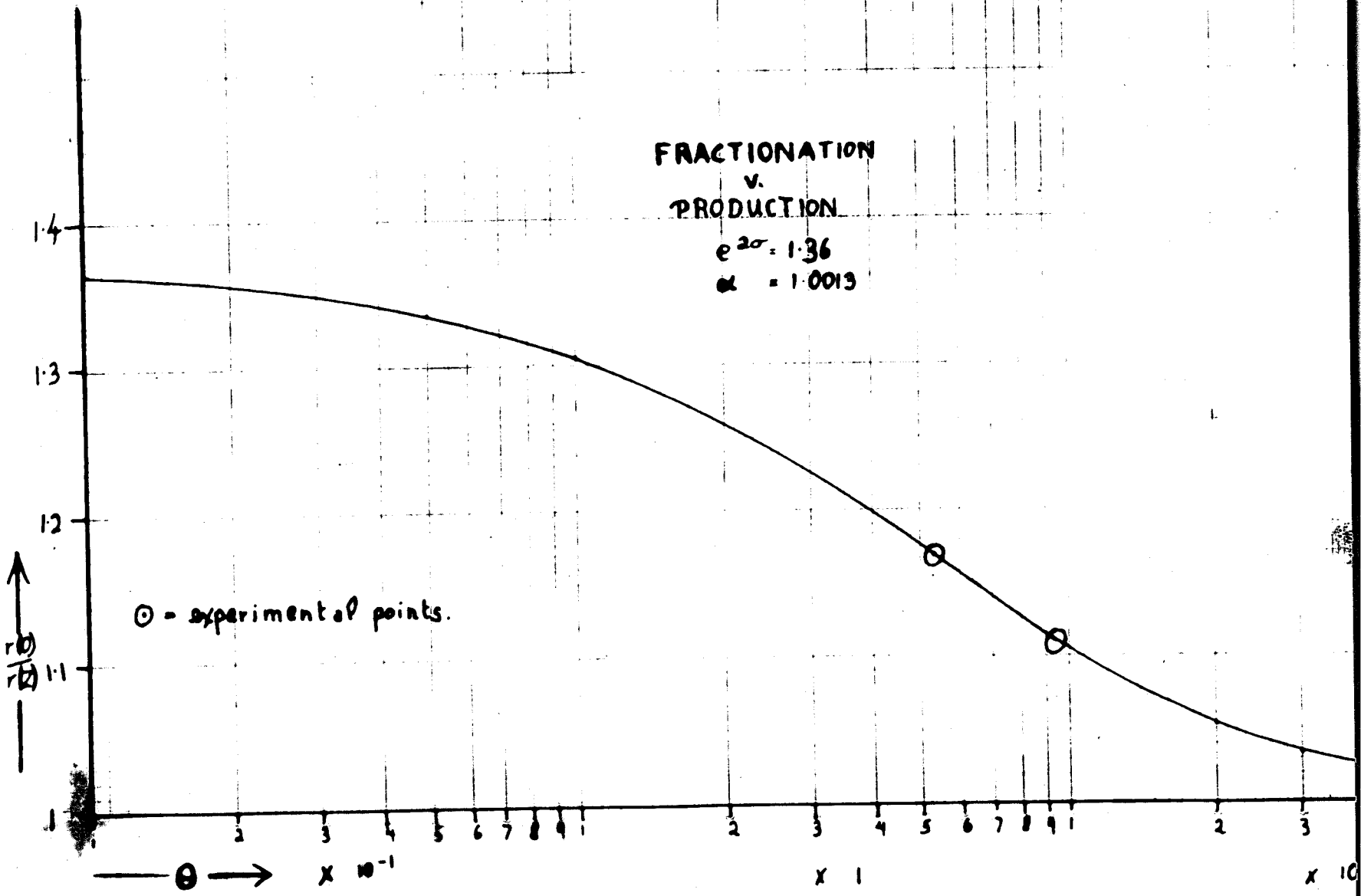
FRACTIONATION
v.
PRODUCTION
$e^{2\sigma} = 1.36$
$\alpha = 1.0013$
⊙ = experimental points.
1.4
1.3
1.2
1.1
1
$\frac{r(0)}{r(\theta)}$
θ
x 10⁻¹
x 1
x 10

FIG. III

Fig. I and III show the plot of fractionation against production for two different values of $e^{2\sigma}$; from which it can be seen that even a very small production reduces the fractionation very markedly.

Equation (2) is of particular value in this present work since it enable both the relative volatility (α) of the mixture and the 'platage' of the column to be determined. The equilibrium fractionation with no production ($e^{2\sigma}$) is clearly equivalent to α^{ν} for a column of ν equivalent plates; a further set of data, with non-zero p and θ (i.e. at a known rate of production), enables equation (2) to be solved simultaneously for α and ν.

A convenient value for the reflux ratio in the second distillation, is one which reduce the fractionation by about one half.

Another aspect of distillation considered by Cohen is the time required for a given column to approach the steady state, at total reflux. This is important in column design because it is desirable to avoid excessively long equilibration periods, when isotopes or other very close-boiling mixtures are being separated.

Cohen describes the rate of approach to equilibrium by means of a second order partial differential equation, which has been derived from the differential equations cited above. The second order equation is then solved by means of its

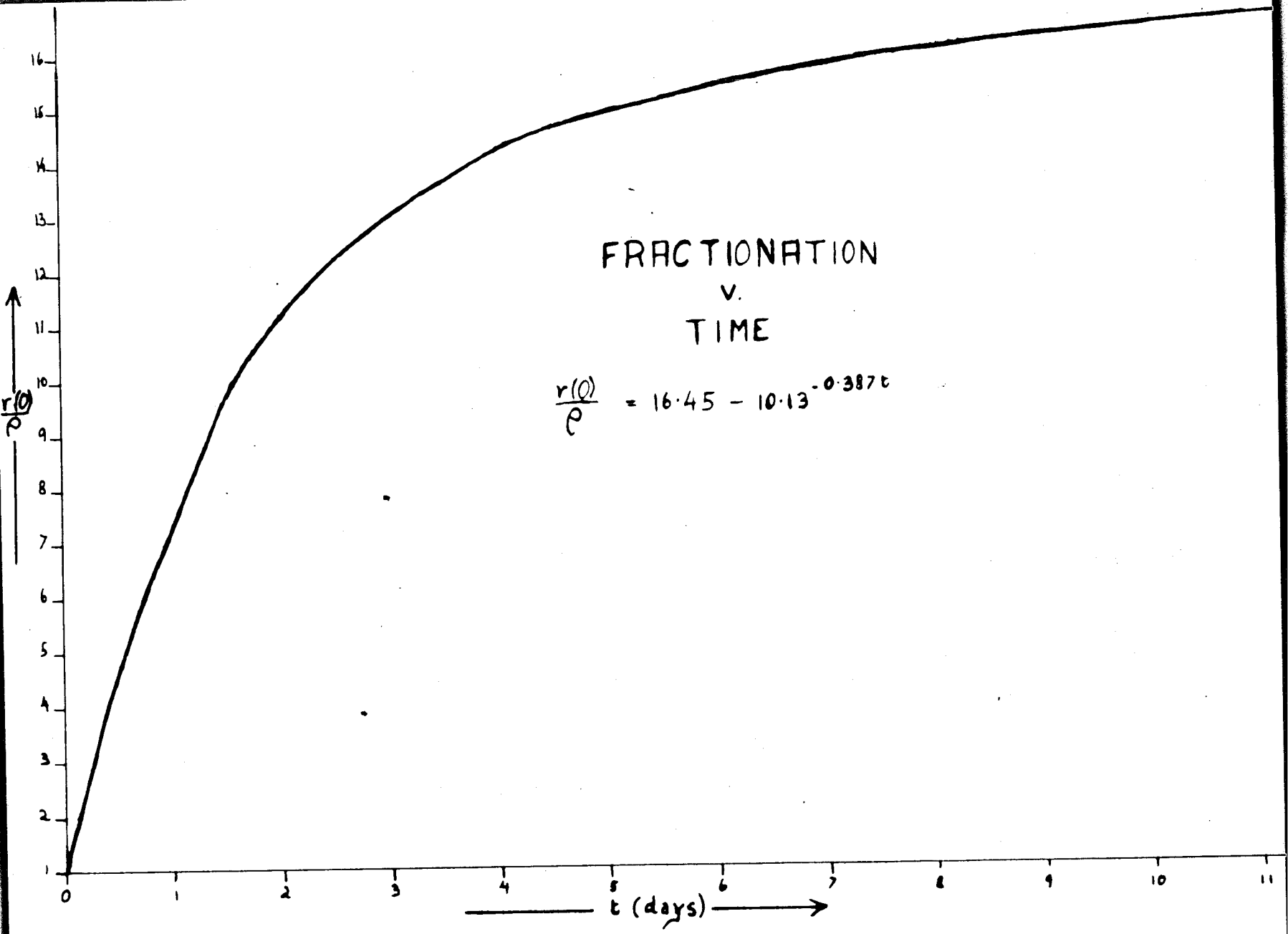
FRACTIONATION
v.
TIME
$\frac{r(t)}{\rho} = 16{\cdot}45 - 10{\cdot}13^{-0{\cdot}387t}$
$\frac{r(t)}{\rho}$
t (days)
0
1
2
3
4
5
6
7
8
9
10
11
12
13
14
15
16

FIG. II

Laplace Transform. An expression for $r(o)/\rho$, the fractionation at time t, is obtained in the form shown by the skeleton equation:-

$$\frac{r(o)}{\rho} = e^{2\sigma} - C_1 e^{-|p_1|t} - C_2 e^{-|p_2|t} \qquad (3)$$

For systems where $1/h > L/H$ and $h+H \gg H(\alpha-1)$ the term $-C_1 e^{-|p_1|t}$ is the largest and slowest to vanish, and the time of coming to equilibrium is, therefore, determined by p_1.

A numerical example has been worked out, using the data relating to the column used in the examination of the BCl_3 system, and the value of α predicted by Urey. The rate of approach to equilibrium is shown in Figure II.

The pertinent information which accrues from Cohen's work is:- Fractionation is a very sensitive function of the production. The time required to reach the steady state increases with α, the hold-up, and the number of theoretical plates. Hence the platage of the column should be a compromise between the enrichment desired and the length of time for which it would be practicable to wait before equilibrium was achieved. Also the hold-up should be as smallas possible and therefore a small H.E.T.P. is most desirable.

2. Packing Efficiency.

Gauze ring packing, invented by Dixon, has recently become available commercially. The characteristics of this packing have been examined in considerable detail (16), and appear to

be most suitable for high efficiency, low hold-up columns.

Having once chosen a suitable packing material (Dixon gauze rings) it was considered desirable to have some estimate of its efficiency in the particular design of column to be used. Unfortunately no test mixtures are available of sufficiently low relative volatility, to enable the platage of columns of more than about 80 theoretical plates to be measured.

It was decided, therefore, to determine the efficiency of the packing in a smaller column of identical bore and with a boil-up rate similar to that used in the larger column, thus providing a rough value of the platage to be expected from its larger column.

The assumption that the H.E.T.P. obtained from the smaller column is applicable to the larger column, is open to considerable doubt. Thus a number of points of departure between the two systems is apparent. Reed and Fenske (17) have shown, as a result of the examination of the hydrodynamics of liquid-vapour flow in packed columns, that the hold-up in the packing depends upon the physical properties of the liquid, and possibly also those of the vapour. In particular it is thought that the viscosity and surface tension of the liquid may influence the hold-up. The physical properties of the test mixture, methyl cyclohexane/n-heptane, differ from those of boron trichloride, in a number of important ways, e.g. latent heat of

vapourization and boiling point. The viscosity of boron trichloride has not been reported in the literature.

Ward (18) has stated that the H.E.T.P. increased with increasing distance from the bottom of the column. This effect is probably due to the pressure drop through the packing as well as to imperfect heat insulation.

3. Column Design.

The design of the fractionating section involves two main sets of variables. The first is the diameter and length of the column and the second is the type and degree of heat insulation.

The length of the column will depend upon a compromise between two factors; the platage desired, and the time of equilibriation of a column of that number of theoretical plates. A column equivalent to 200 plates was required, and it was estimated that the equilibrium time for such a column would be about 10 days, if α were equal to 1.014. The H.E.T.P. obtained from a test column containing gauze ring packing was used to determine the height equivalent to approximately 200 theoretical plates.

The diameter of the column is fixed at the lower limit by that value at which flooding will just not take place under the boil-up rate to be used. For gauze ring packing this value is

approximately ¼". The effect of increasing the column bore has no such clearly defined limit. Ward (18) points out that since the hold-up and the capacity of the column increase in roughly the same ratio with increasing diameter, the total effect is to produce a slight loss in fractionation. Dixon (16) has measured the relation between H.E.T.P. and column bore between ½" and 1½" and his conclusions are in general agreement with Ward's. The decrease in efficiency, however, is not rapid with increasing column diameter.

If a column is not insulated to operate approximately adiabatically at all times, the variation in heat gained or lost through the column wall will change the H.E.T.P. appreciably. This results from variation in the amount of liquid hold-up which in turn varies the vapour velocity, (19), (20), (21). Internal reflux resulting from excessive heat loss may under some conditions bring about a slight increase in fractionating efficiency, but such results are probably fortuitous to a large extent, and as yet no explanation has been given for this phenomenon. Superheating may completely destroy separation no matter how effective the column may be as a contacting apparatus.

4. Still-pot Design.

Dixon (16) has demonstrated that the efficiency of the column is a moderately sensitive function of the vapour velocity. Hence the necessity for adequate control of the

boil-up rate. This can only be achieved if the still-pot is very well thermally insulated.

Various devices are used to measure vapourization rate at the top or bottom of the column, but these are usually of only rough accuracy. However, with very good insulation it is practicable to measure vapourization rate by heat input.

The ratio of still-pot charge to column hold-up will depend upon such factors as; the concentration of the components; the relative volatility; and whether the column is to be used to produce relatively substantial quantities of enriched material, or merely sufficient material to determine the fractionation attained. Williams(22) has suggested that a ratio of 10:1 might be an acceptable value for general analytical practice, and Fay (23) has suggested 20:1 for this ratio. However, in view of the nearness to unity of the relative volatility of the isotopic boron chlorides, a value of 2 or 3:1 is probably permissable.

5. Pre-flooding.

Packings made from wire or gauze hold a film of reflux by surface tension and it is well-known that a flooding treatment increases their fractionating efficiency, a fact first reported by Nickels (24). This treatment removes all entrapped air from the packing interstices and causes the reflux to spread uniformly over the packing surface. According to Dixon (16) the importance of this pre-flooding has not, in the past, been properly

appreciated. He stresses the importance of pre-flooding the packing at the same rate at which the actual distillation is to be performed; and upholds this argument with very convincing experimental evidence.

6. Vapour Velocity.

Dixon (16) has investigated the effect of the vapour velocity upon the efficiency and hold-up of gauze ring packing. He reports that the efficiency of the packing is approximately proportional to the reciprocal of the vapour velocity over a wide range. This range has a lower limit at 0.1 ft/sec., at which point there is a marked loss in efficiency due to an insufficiency of reflux liquid to seal all the apertures. A similar decrease in efficiency occurs at velocities above 1.0 ft/sec. when unsealing of the apertures begins.

Dixon has also found that hold-up increases linearly with the vapour velocity from 0.1 ft/sec. to 1.0 ft/sec.

7. Take-off Section.

The effect of the production rate upon fractionation has already been considered, although there remains the question of the best method to employ in controlling the take-off rate. Of the two general methods available, liquid partition and vapour partition, the first has been discarded as being too difficult to adapt to very large reflux ratios.

Intermittent take-off was employed, with a short time at

virtually zero reflux, separated by a long interval of total reflux. Such a method is thought to have the advantage of allowing sufficient time for equilibrium to be re-established between the small disturbances provided to the system by removal of material.

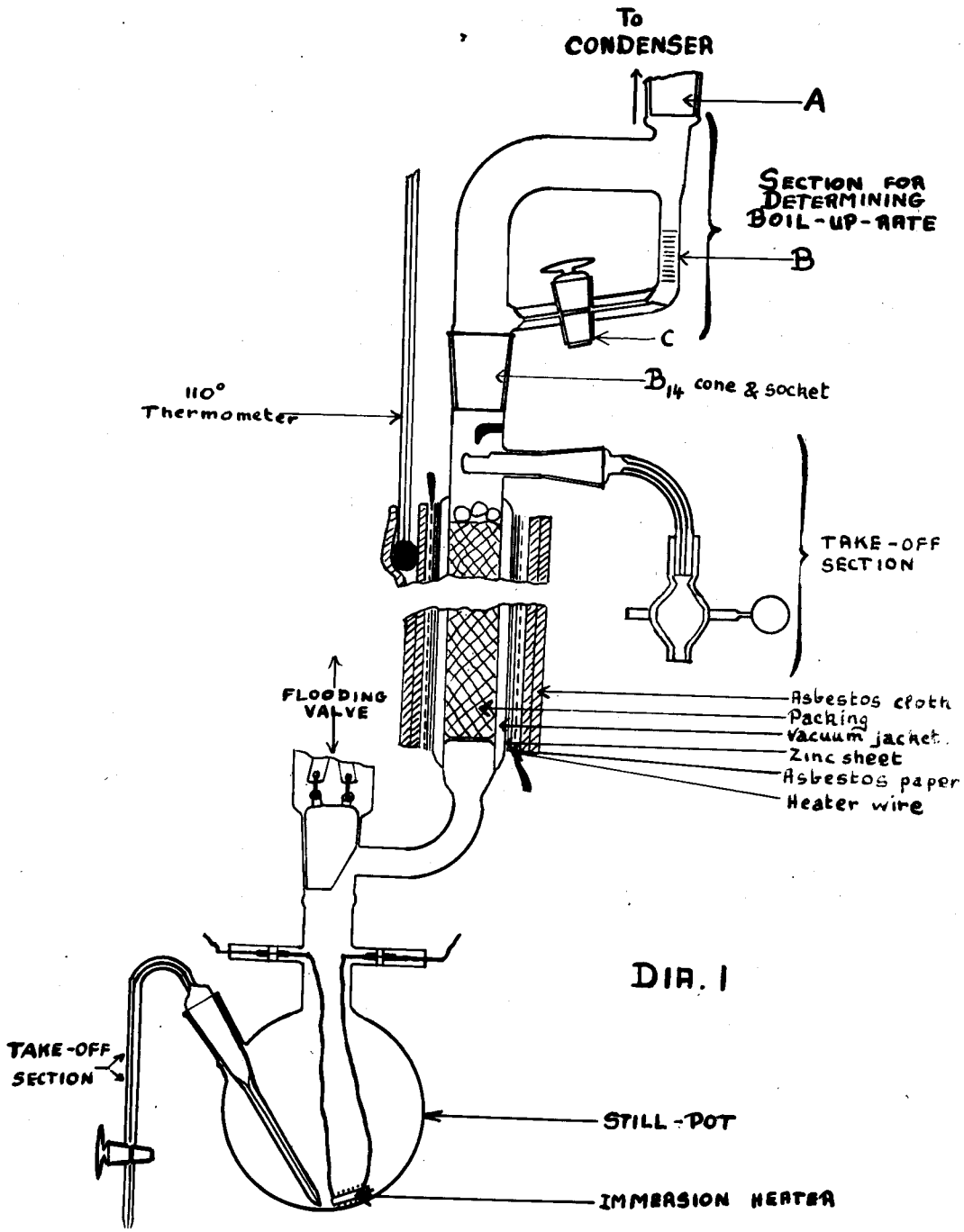
To
CONDENSER
A
SECTION FOR
DETERMINING
BOIL-UP-RATE
B
C
B_{14} cone & socket
110°
Thermometer
TAKE-OFF
SECTION
FLOODING
VALVE
Asbestos cloth
Packing
Vacuum jacket
Zinc sheet
Asbestos paper
Heater wire
TAKE-OFF
SECTION
STILL-POT
IMMERSION HEATER

DIA. I

IV.

FRACTIONATING APPARATUS.

The materials used to construct the apparatuses which are described below were limited to those chemically stable to boron trichloride and traces of hydrochloric acid. Pyrex glass was used throughout unless otherwise stated. The boron trichloride fractionating assembly was constructed so as to withstand permanent evacuation.

1. Packing Efficiency.

The need for testing the efficiency of the column packing has been mentioned (III, p.16), and the apparatus used for this purpose is shown in Diagram I.

The inner tube of the vacuum jacketed column was 50 cms. long and 21 mm. bore. In order to compensate for radiation losses through the vacuum jacket (boiling point of test mixture ~100°C.) a heating mantle was placed round the column. The mantle was built up as shown in the diagram. The zinc foil served to ensure even distribution of heat from the heating element, which consisted of Nichrome resistance tape wound in a spiral of ¼ inch pitch. A variable resistance was used to control the jacket temperature which was kept at approximately 101°C.

The Dixon packing used in this work had been made from 1/16" x 7/16" pieces of 100 mesh stainless steel gauze, wound

the form of a spiral 1/16" x 1/16". The packing was degreased by successive ether washes and dried in an oven at 110°C. When the apparatus was assembled warm dry air was drawn through it in order to remove any water vapour present. The gauze ring packing was then placed in the column.

It was not found necessary to grease any of the ground glass connections in the apparatus.

A 200 ml. charge of a 20/80 mixture (V/V) of n-heptane/methylcyclohexane was put in the still-pot. The boiler immersion heater was of the resistance wire type, heat input being controlled by means of a "Variac" transformer.

The immersion heater was switched on with the flooding valve (IV, p.30) turned to the flooding position. After pre-flooding, the boil-up rate was adjusted slightly so that condensation occurred at point A.

Take-off from the top of the column was effected by rotating the cup-like device to the position shown in Diagram I. Samples of liquid could be drawn off from the still-pot by means of the arrangement shown.

The composition of still-pot and column samples, removed at about the same time were determined by means of their refractive indices.

Results:

Time of removal of samples (measured from end of pre-flooding) . = 34 hours.

Averaged n_D^{20}, still-pot = 1.4195

Averaged n_{20}^{D}, column = 1.3946.

These values were interpreted by means of the equation quoted by Buck (26):-

$$N = \frac{\log x_o (1-x_n)/x_n (1-x_o)}{\log R},$$

where N is the number of theoretical plates; R has the value of 1.0726; x_o is the mole fraction of n-heptane in the still-head; x_n is the mole fraction of n-heptane in the still-pot. If x_n is greater than x_o they are interchanged in the above formula. The values of x_n and x_o were interpolated from a table of refractive index v. mole fraction of n-heptane, given in the same paper. N = 54, and therefore the H.E.T.P. = 0.80 cm.

The boil-up rate was measured by means of the device shown. The tap C was closed and the time required to fill the 1 ml. graduated tube, B, was measured. The average of 3 values gave 6.6 sec./ml. Thus the boil-up rate was 546 ml./hr., corresponding to a vapour velocity of approximately 0.35 ft./sec.

It will be seen from Table III that the conditions in the

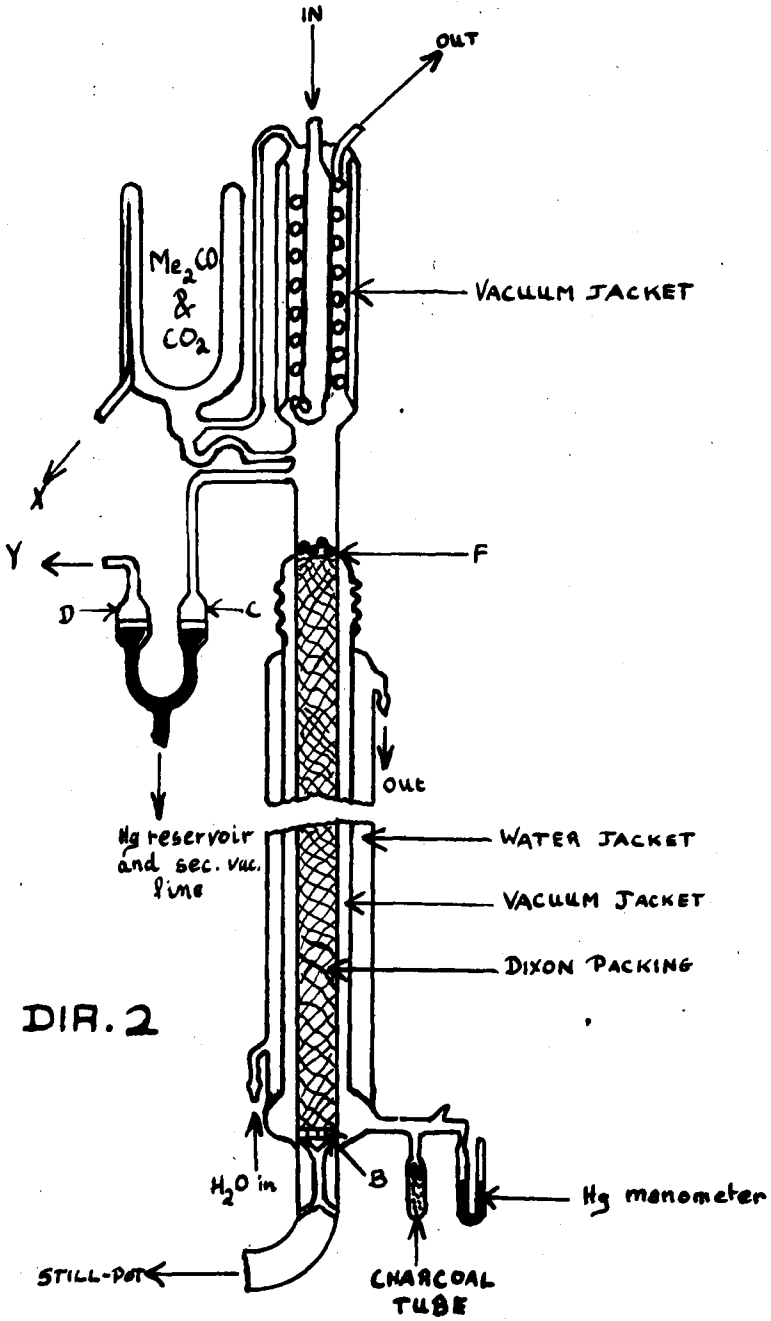
IN
OUT
Me_2CO
&
CO_2
VACUUM JACKET
X
Y
F
D
C
out
Hg reservoir
and sec. vac.
line
WATER JACKET
VACUUM JACKET
DIXON PACKING
H_2O in
B
Hg manometer
STILL-POT
CHARCOAL
TUBE

DIA. 2

two columns are closely parallel, thereby giving some justification for assuming that the H.E.T.P. obtained for the smaller column would be applicable to the larger column.

TABLE III.

	18" Column.	60" Column.
Column diameter	21 mm.	21 mm.
Approximate vapour velocity	0.35 ft/sec.	0.23 ft/sec.
Temperature of column	100°C.	12.8°C.
Surface tension of charge (@ 20°C.)	18	16.
Latent heat of vapourization of charge	386 joules/gm.	160 joules/gm.
H.E.T.P.	0.80 cm.	0.65 cm.
α	1.071	1.0013

2. Column Design.

Diagram 2 shows the column, condensers and take-off valve of the assembly used for the fractionation of boron trichloride.

The column consisted essentially of three concentric glass tubes. The 21 mm. bore inner tube was packed for 160 cms. of its length with gauze rings, which were packed into this tube

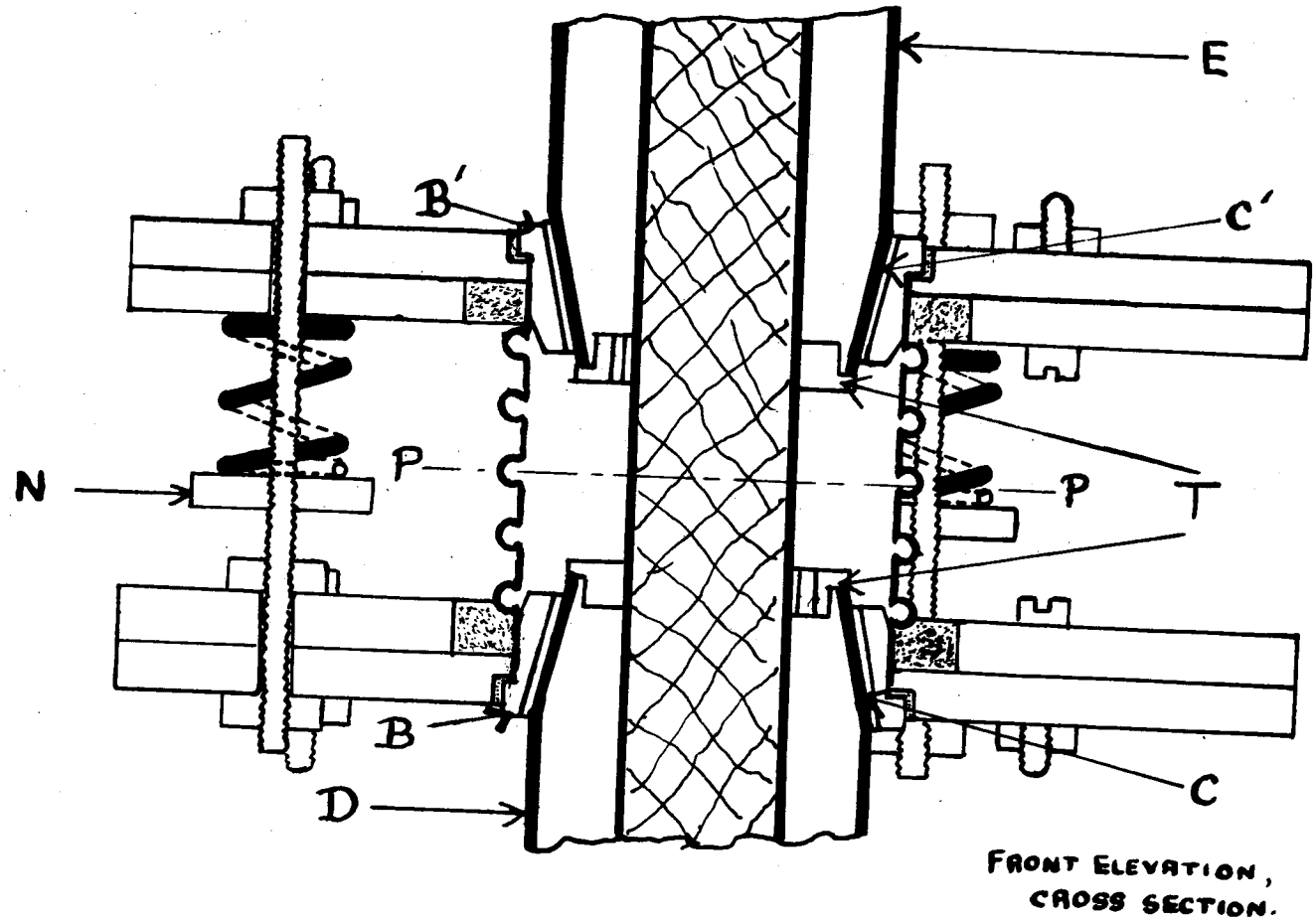

DIA. 3

a little at a time, to ensure a uniform density of material. The packing was held up by means of the glass "mesh", B. It was also found necessary to place a number of glass beads on the top of the packing to prevent the gauze rings from being displaced by boiling liquid during the pre-flooding process. The function of the water jacket, which was held at about 10°C., was to compensate for any residual heat leakage across the vacuum jacket.

A serious problem arose in connection with the construction of the column. This was the stress produced between the two innermost tubes as a result of their being at different temperatures. The absolute value of the contraction of the innermost tube when there was a temperature difference of 90°C. was 1-2 mm. This difficulty was overcome by inserting a metal bellows in the position shown on Diagram 2. The choice of metal bellows, rather than the more usual glass type, was dictated by the need for a robust, easily fabricated unit. A detailed drawing of the bellows assembly is shown in Diagram 3.

The assembly consisted of two main sections; the bellows, and the pressure compensating device. The bellows section is best described in the order in which it was assembled. The phosphor bronze bellows, containing about 20 convolutions, were soft soldered to the brass sockets B, B'. A slotted

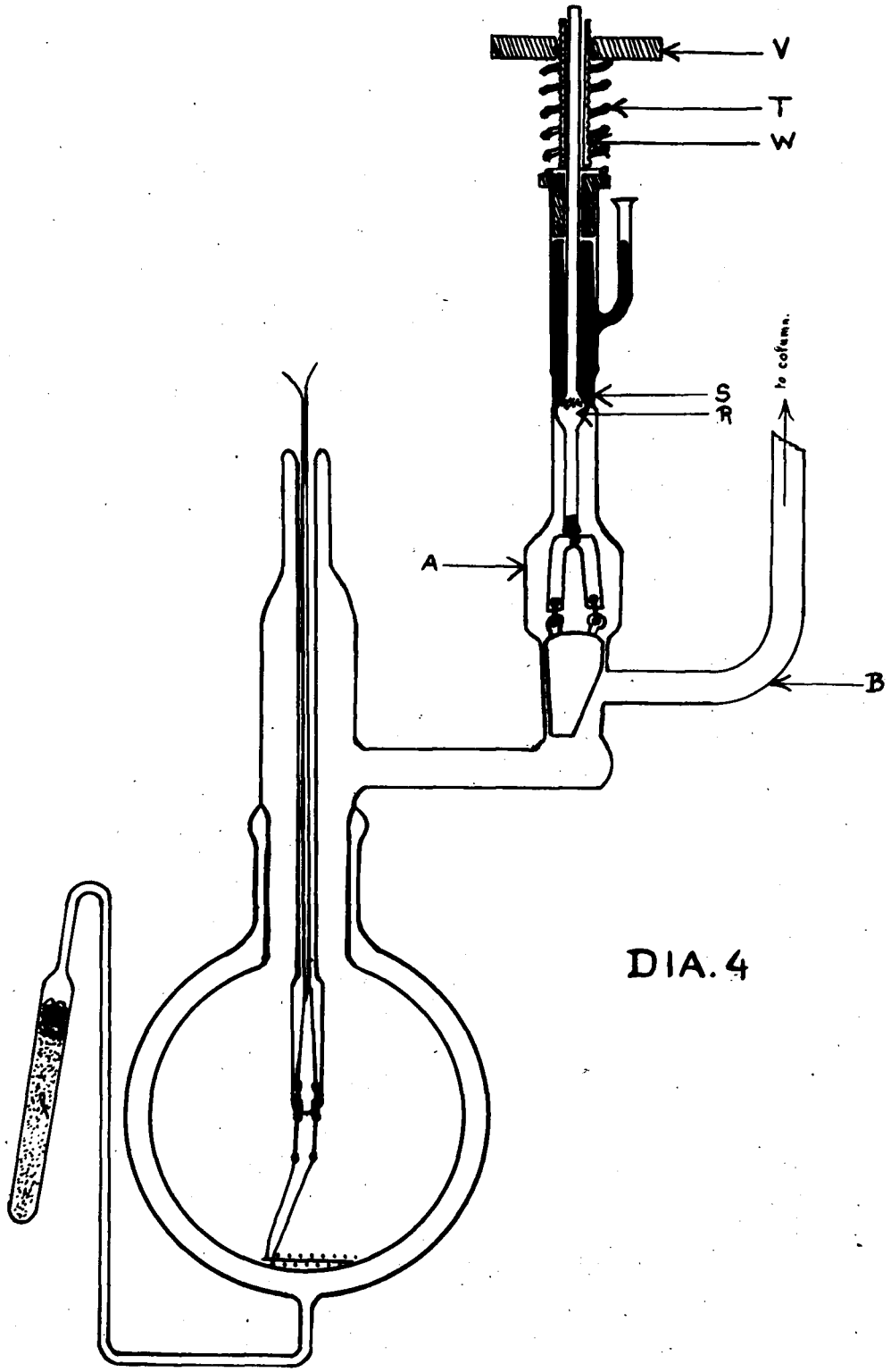

DIA. 4

"Tufnol" spacer T was placed on the B34 cone C. The bellows with sockets, were then placed over the cone C. The continuation of tube D, i.e. E. was then placed in position and welded on at point F (shown in Diagram 2). The bellows were contracted slightly and each pair of cone and socket waxed together in turn. This unit was vacuum tight as well as being flexible.

Severance of the waxed connections occasionally occurred due to the pressure exerted on the bellows when under vacuum. This was overcome by means of the pressure compensating device shown; which consisted mainly of two discs held apart by 3 compression springs. The spring contraction versus applied pressure was measured for each spring. In this way it was possible, by means of nuts N, to cause each spring to exert the same force on the bellows. The total force between the two sets of discs was equivalent to approximately 1 atmosphere pressure, for a cross section measured at p - p.

3. Still-pot Design.

The importance of a well insulated still-pot and adequate control of the boil-up rate has been mentioned (III, p.19). Thus thermal insulation of the still-pot was provided by means of vacuum jacketing, and heating by an electric immersion heater. The flooding valve and boiler are shown in Diagram 4.

To fabricate the vacuum jacketed still-pot the outer flask was cracked in half along its equator and the two pieces placed around the inner flask and then sealed together. The function of the trap containing outgassed activated charcoal, was to remove any gases desorbed after the vacuum jacket had been sealed off.

A Nichrome resistance heater was used to heat the boiler charge. Such a heater has the advantage of easy computation of energy input and freedom from bumping. The electrical connections to the heater were made via vacuum tight tungsten-in-glass seals. The resistance wire was wound on a rectangular mica former and was placed flat on the bottom of the boiler, thereby ensuring that the heater remained covered with boron trichloride when the column was being flooded.

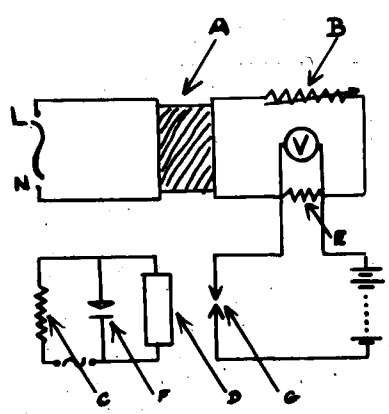

KEY

A — CARBON-PILE STABILIZER.
B — 250 Ω VARIABLE RESIS.
C — 2000 Ω " "
D — SOLENOID, 200 Ω RESIS.
E — 18 Ω STILL-POT HEATER
F — SELENIUM RECTIFIER
G — CONTACTS OPERATED BY SOLENOID, NORMALLY OPEN.

DIA. 5

The circuit diagram for the heater is shown in Diagram 5. Since the mains voltage was subject to considerable fluctuations, it became necessary to use a carbon-pile stabilizer in the heater circuit. A sliding resistance was used to control the voltage across the heater. The connection between the mains and the heater was made from the neutral line, thus reducing the risk of damage to the heater in case of short circuiting. The function of the bottom half of the circuit shown, was to bring an auxiliary power supply into operation in the event of an interruption of the mains supply.

4. Pre-flooding Valve.

It has been found (27) that if the connecting tube between the still-pot and the column is ⅛" diameter, flooding of the packing will occur automatically. Since this is undesirable, it is apparent that there is a need for some form of valve between the boiler and the column, in order to utilise the increased efficiency obtained with "pre-flooded" packing, see (III p. 20) . A magnetically operated "butterfly" valve has been used for controlling the effective diameter of the tube between the boiler and the column. However, Dixon (28), to whom this valve is ascribed, points out that such a mechanism is subject to occasional seizure. This is a severe disadvantage when a readily hydrolyzable substance like boron trichloride is being used.

The type of valve shown in Diagram 4 gave trouble-free service for a long period. The lower half of the valve housing, A, incorporated a B24 socket with the side arm, B, leading from it. A partly ground away B24 cone was suspended in the socket, leaving about ½ mm. clearance all round. The cone could be rotated so that, under normal conditions, the ground away side faced the side arm, as shown. For flooding conditions the valve was rotated through 180° so that a complete surface faced the side arm, thus inhibiting liquid return. The complete success of the valve action depended upon the formation of a liquid seal between the cone and socket.

The turning mechanism was made gas tight by grinding the thickened part of the glass rod, R, into the constriction, S, and placing mercury above the ground joint so produced. The ground surfaces were held together by means of the spring, T, the force exerted on the grinding being slightly in excess of that due to the atmospheric pressure when the boiler was evacuated. The large adjustable nut, V, was threaded over the brass sleeve, W, which was waxed onto the glass rod, R. The tension due to the spring could be altered by turning V.

5. Condenser Assembly.

The complete condenser arrangement is shown in Diagram 2. Very nearly all the ascending vapour was liquified by the spiral

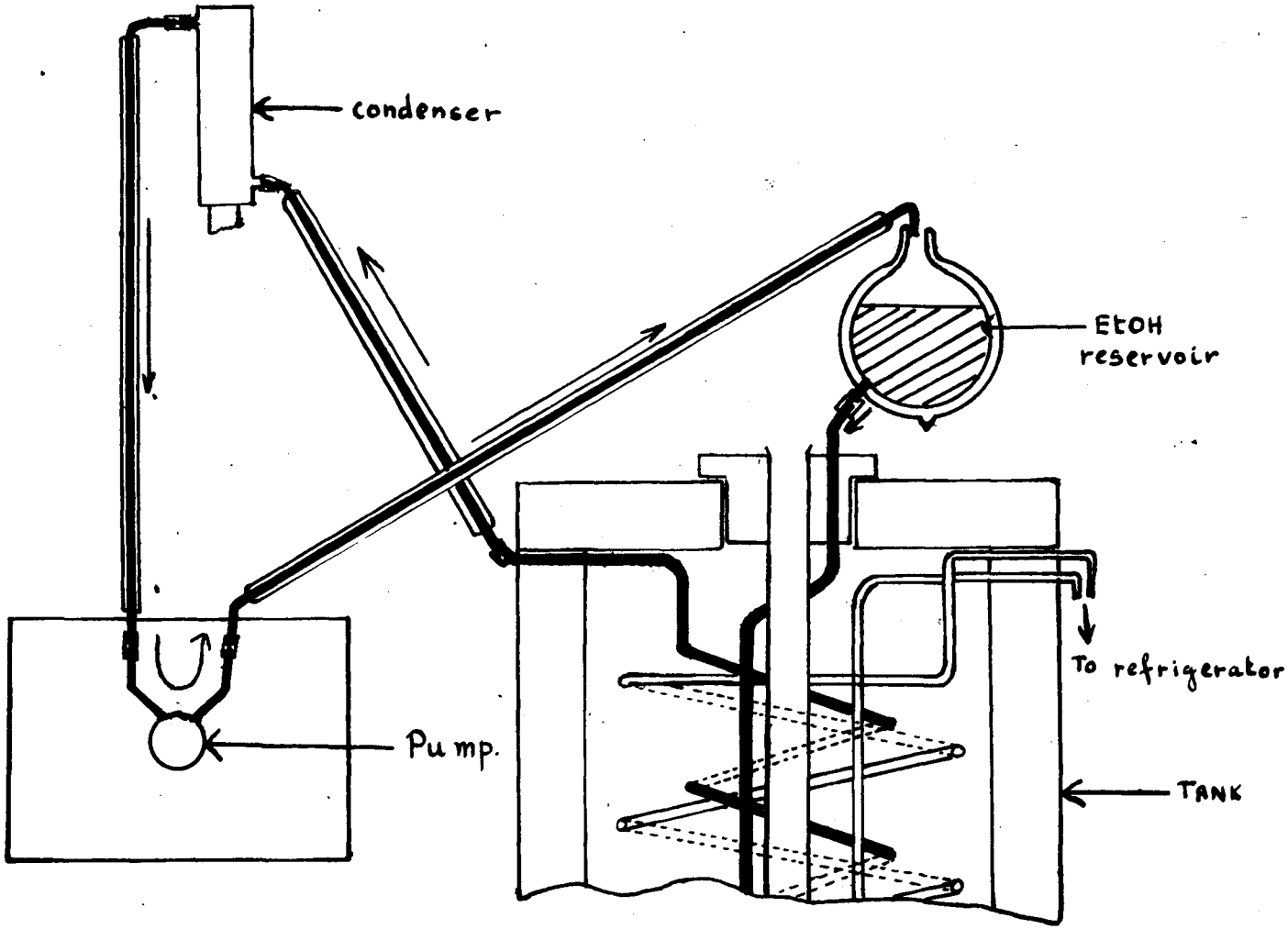

DIA. 6.

condenser. The subsidiary vapour trap served the dual purpose of trapping any uncondensed vapour, and acting as a safety device in case of failure of the system for circulating coolant.

The cooling coil of the spiral condenser was arranged to make the gas path to the top of the condenser as long as possible. Thermal insulation was provided by means of a vacuum jacket. The coolant temperature was approximately -20°C. under operating conditions.

The safety trap was effectively in series with the spiral condenser by virtue of the liquid seal in the S-bend (coloured in red). Asbestos cloth and cotton wool were used to lag the trap. The coolant was a mixture of acetone and solid carbon dioxide, temperature -78°C. The trap required recharging with carbon dioxide about once every 5 hours.

6. Circulating and Refrigeration System.

The circulating and refrigeration system for providing coolant to the spiral condenser is shown in Diagram 6. Cooling was provided by means of a ¼ horse power refrigeration unit. The coolant was cycled from the tank, which acted as a cold reservoir, through the condenser.

The efficiency of the refrigeration system naturally falls of sharply with decreasing temperature. This provided a considerable difficulty, since it was advisable to operate near the minimum refrigeration temperature, and yet the heat extractable in this region was very small.

Thus if the temperature was to be kept at -20°C., only about 20 watts could be taken up, which meant that very little heat could be allowed to leak into the circulating system. Also that the pump itself should introduce as little heating as possible.

The cooling coil of the refrigeration unit was immersed in a thermally insulated tank. The tank, which consisted of a 12 gallon tinplate box, was lagged all round with cork board to a depth of 8 inches, and finally encased in a closely fitting metal box. A water-proof sealing compound was used to stick the cork together, thereby preventing water from condensing between the layers of cork. This tank was filled with trichlorethylene (chosen because of its nonhydroscopic and non-inflammable nature), and contained also a copper coil through which could be circulated the alcohol used as the medium for transferring heat from the condenser to the cold tank. A vacuum jacketed flask was interposed, in the alcohol circulating system in order to provide a reservoir of alcohol which would nullify the effect of contraction of slight loss of coolant.

After a number of unsatisfactory attempts, using gear pumps, sylphon bellows pumps, centrifugal pumps and piston pumps, a pump was finally produced which met the requirements adequately. It was of the eccentric vane type, driven by an electric motor

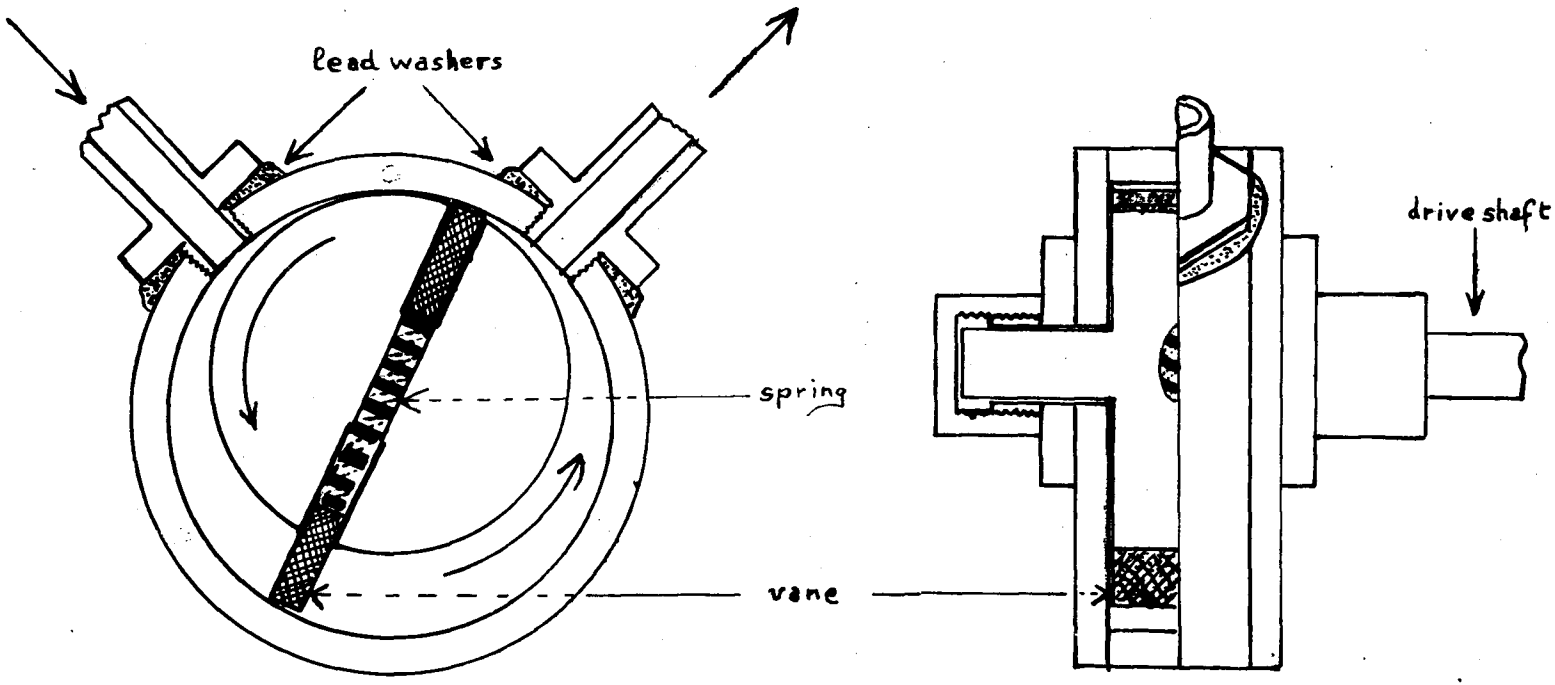

Sectional
Front View.

Side view
Half Section

DIA. 7

through a long thermally insulated shaft, and provided an adequate flow rate (2-300 ml/min.) without permitting excessive heat influx. The details of construction will be evident from Diagram 7.

3. Alarm System.

The device shown in Diagram 8 was connected to the outlet from the safety trap, and functioned as an alarm system in the event of failure of the circulating system. The alarm consisted of a Venturi-type flowmeter with electrical contacts in one limb so arranged that a small flow of gas along the outlet tube was sufficient to cause the mercury thread to rise from A to B thereby completing the alarm bell circuit. The effective length of the capillary tube was made adjustable by means of a closely fitting tungsten wire, which could be moved along the tube.

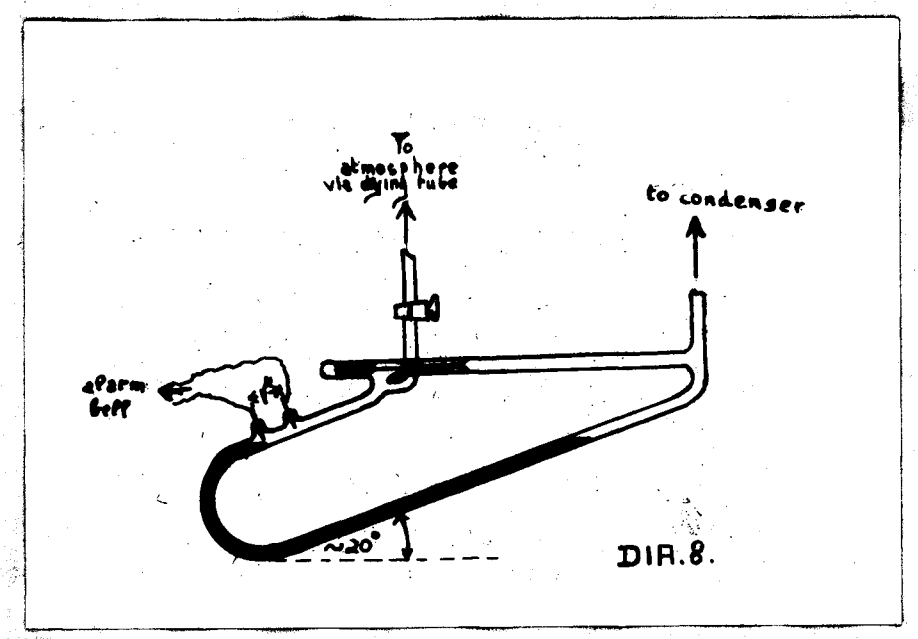

DIA. 8.

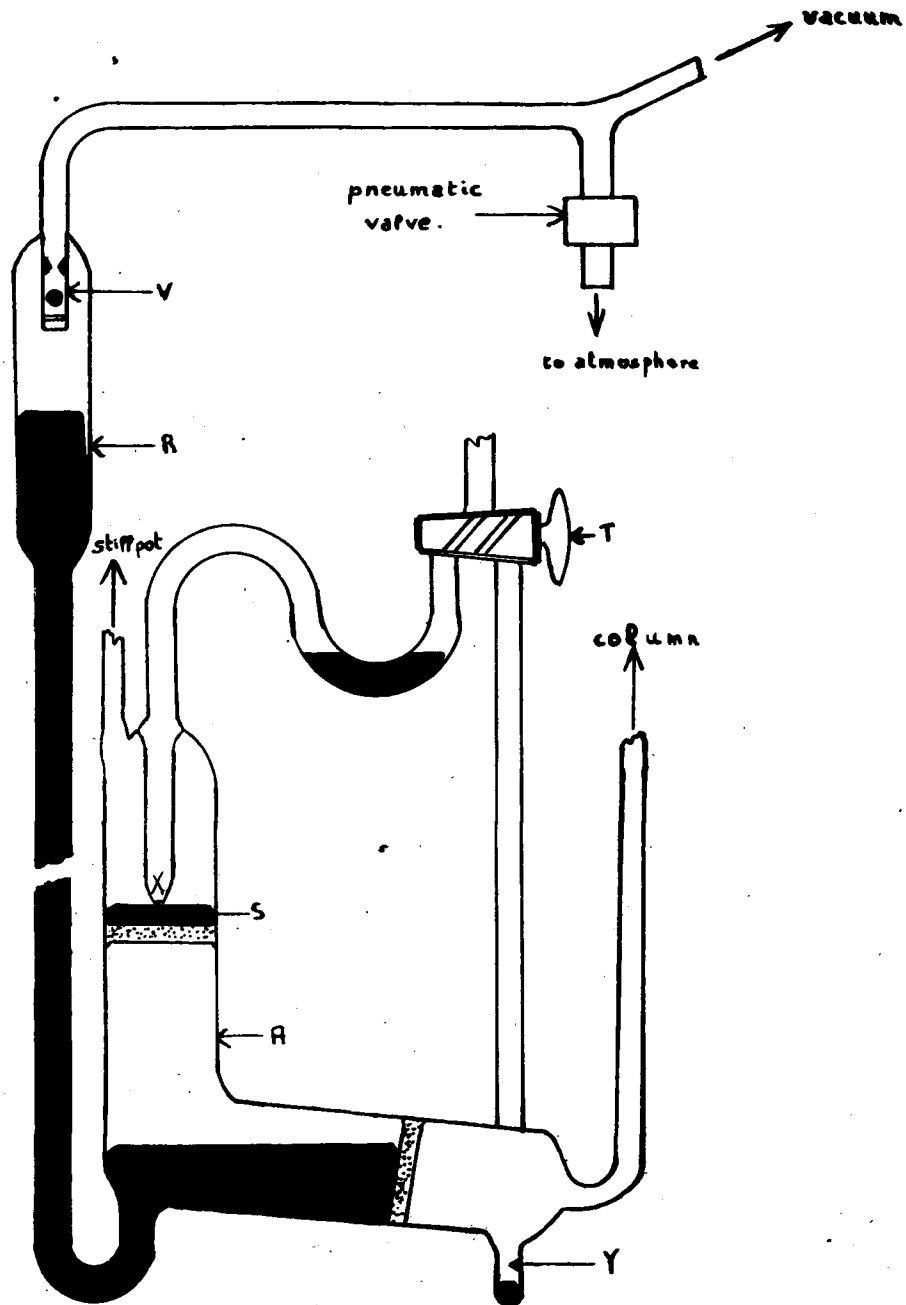
vacuum
pneumatic
valve.
to atmosphere
V
R
stiffpot
T
column
X
S
A
Y

DIA. 9

8. Feedback Pump.

The need for a controlled, predetermined rate of removal of material from the top of the column has been mentioned, see (III, p.21). Continuous removal of boron trichloride from the top of the column would quickly exhaust the still-pot charge. To obviate this difficulty the material taken off at the top of the column was fed back into the still-pot, thus conserving the charge of boron trichloride. The pump which carried out this operating is shown in Diagram 9.

The two sintered discs which were permeable to gas but not to mercury, were arranged to function as non-return valves. The pumping action was provided by mercury from the reservoir, R, which was evacuated and opened to the atmosphere in turn. Thus when mercury was withdrawn from the chamber, A, its place was taken by gas from the top of the column, and not from the boiler, since the mercury at S prevented this. On releasing the vacuum in R, the mercury filled the chamber, and expressed the boron trichloride into the still-pot. The arrangement containing the three-way tap, T, was provided as a means for removing mercury from the points X and Y in the eventuality of mercury leaking through either of the sintered discs.

The reservoir, R, was placed approximately 15 inches above the chamber, and its mercury charge protected from loss by means

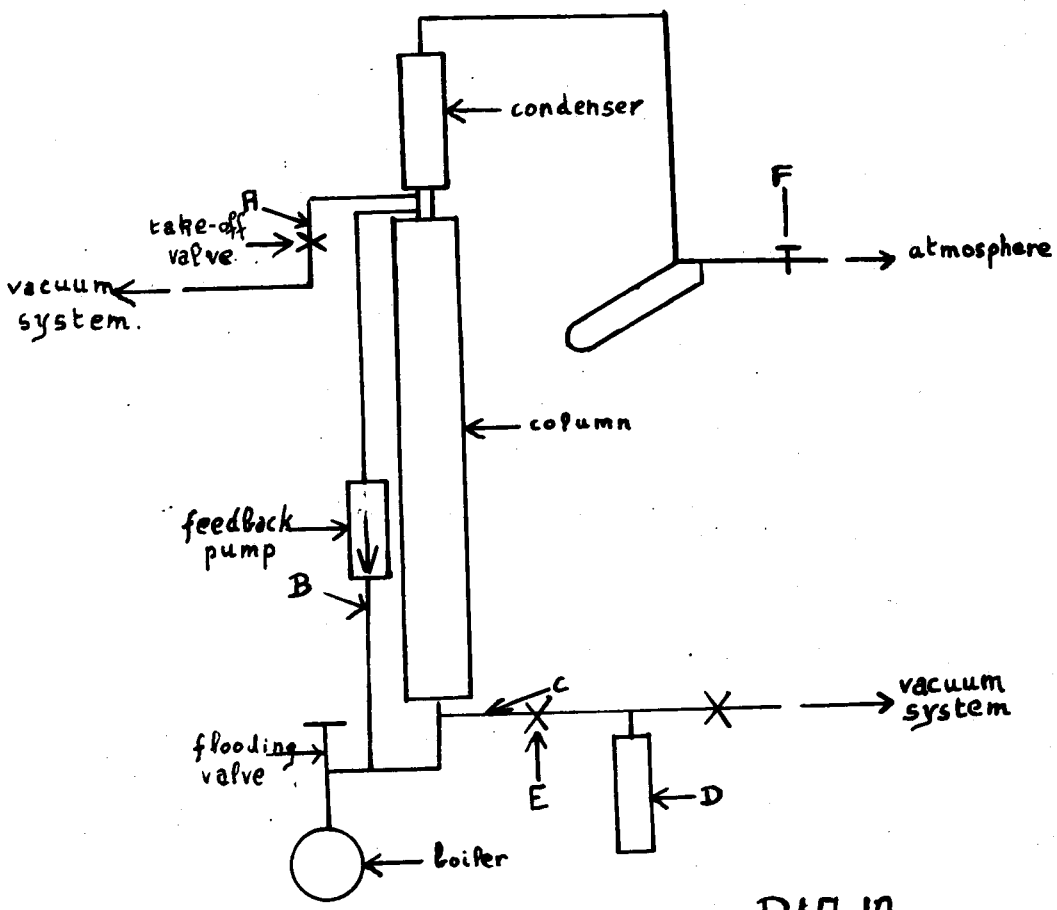
condenser
F
atmosphere
A
take-off valve
vacuum system.
column
feedback pump
B
C
vacuum system
flooding valve
E
D
boiler

DIA. 10

of the ball valve, V. The process of alternately evacuating and opening the reservoir to atmosphere was accomplished by opening and closing a valve connected to an air leak in the suction line. A synchronous motor was used to drive a cam-operated make and break, which in turn actuated the solenoid operated valve for known time intervals.

To prevent boron trichloride condensing in the pump, the whole assembly was immersed in a water bath kept at $\sim 30^{\circ}C$. The volume of gas pumped per cycle was measured using air, the value obtained from four cycles of operation was 42 ml., i.e. 10.5 ml/1½ mins. for a double action cam, and 21 ml./1½ mins. for a quadruple action cam.

9. Operation of Column.

The procedure employed in carrying out a distillation, from charging the boiler to removing material from the top of the column, is described below, with the aid of a block diagram.

The fractionating assembly (Diagram 10) was evacuated, in order to remove any water vapour present in the system. Boron trichloride contained in vessel D, was allowed to distil into the system, by opening the sintered disc-type valve, E. When the boiler had been charged with liquid returned by the condenser, tap F was opened, valve E closed and the small electric heaters at points A, B and C switched on. These heaters served to prevent condensation in the various side

arms, when the room temperature fell below the boiling point of boron trichloride.

The distillation was commenced with the boiler heater adjusted to give the desired boil-up rate, and the flooding valve turned to the flood position. When the column packing had become completely submerged in boiling liquid, the valve was turned to a position which allowed the slow return of BCl_3 to the boiler. When all excess liquid had been drained off, and normal distillation commenced, the feedback pump was switched on, if it was required for the particular distillation concerned.

During the distillation it was necessary to keep a continual check on the following: voltage across the still-pot heater; level of alcohol in the reservoir for the circulating system; and the amount of solid carbon dioxide in the safety trap.

The removal of samples from the top of the column was accomplished by opening the sintered disc-type valve, G, (shown in detail in Diagram 2), and drawing off about 80 mls. of gas. This was repeated at intervals, long enough to allow the column to re-equilibriate itself, and as often as necessary to obtain sufficient product.

DIA. 11

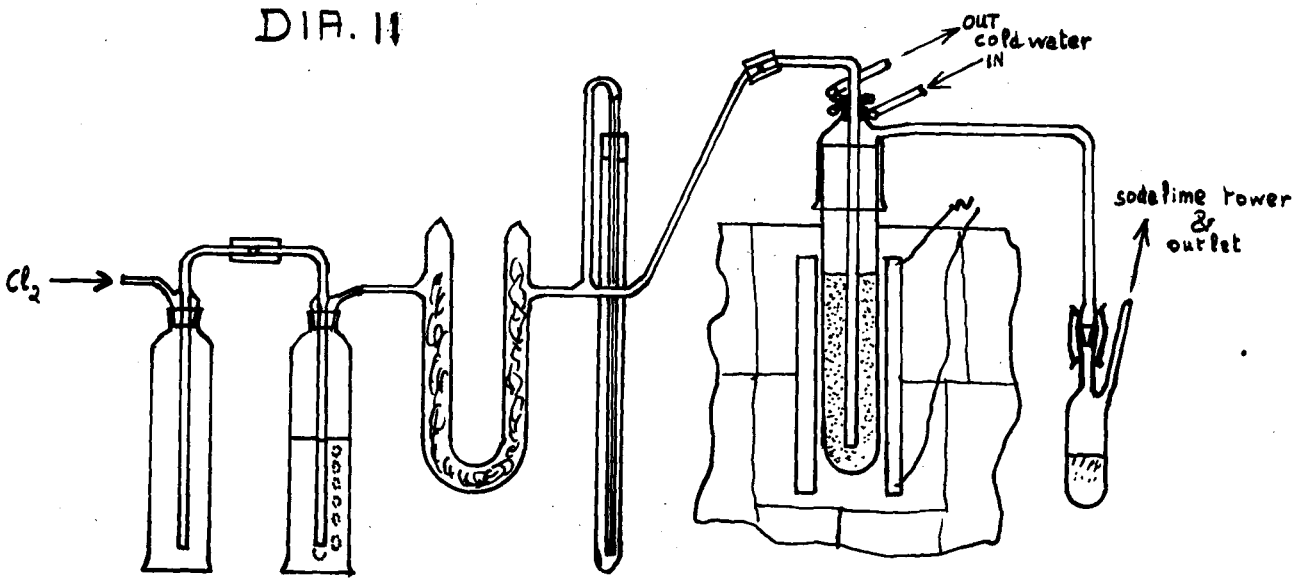

V.

PREPARATION AND PURIFICATION OF BORON TRICHLORIDE.

A number of methods for the preparation of boron trichloride are available, but nearly all of these suffer from the disadvantage of giving a product which is contaminated with impurities which are difficult to remove.

1. Shafran's Method of Preparation.

Shafran (29) has pointed out that the chlorination of boron carbide, according to the equation:

$$8Cl_2 + B_4C \xrightarrow{900^\circ C} 4BCl_3 + CCl_4$$

should give only the products indicated. It was therefore considered worth while to adopt this method of preparation.

The apparatus used is shown in Diagram 11. Chlorine contained in a cylinder was bubbled through a sulphuric acid drying bottle, and then passed through a bed of boron carbide at ~900°C., sulphuric acid spray having previously been removed in the U-tube containing glass wool. The reaction products were collected in a trap immersed in a cold bath (temp. approx. -45°C.), any escaping chlorine or BCl_3 being taken up in the soda lime tower.

The chlorine cylinder was protected from sulphuric acid by means of an empty Dreschel bottle arranged as shown. The

ground glass connections of these bottles were secured with black wax. A number of connections were made using rubber tubing, these were found satisfactorily to withstand chemical attack, and could be made gas tight by binding them with wire. The product receiver was connected to the outlet from the furnace tube by means of a ground glass joint, lubricated with Silicone grease, and held together by strong elastic bands.

Control of the chlorine flow-rate was effected by a needle valve attached to the cylinder, and a rough measure of this rate obtained by counting the bubbles per unit time passing up the sulphuric acid bottle. Care was taken, in packing the reaction vessel, not to block the gas inlet tube; thus it was necessary to blow gently through the inlet tube during the packing and again just prior to passing chlorine through. A lute was provided in the chlorine flow line to prevent a build-up of pressure in case of blockage.

The reaction vessel was constructed from silica tubing, and the arrangement of the inlet and outlet tubes facilitated by means of a glass adapter, which just fitted over the outside of the tube. The glass sleeve was waxed in position, and the wax prevented from softening by means of a water cooled metal coil wrapped around it.

The Electric furnace used was of the resistance wire type wound on a 1½" diameter iron pipe, and insulated with alumina

cement. The lagging was provided by means of magnesia compositon bricks, the whole furnace assembly being contained in an 18" cube asbestos board box. Rapidly raising the furnace to 900° or 1000°C. caused it to burn out, a slow increase in the applied voltage being necessary instead, and even with this precaution the winding would not withstand being raised to such temperatures on more than a few occasions. It is believed that this is not an infrequent failing with this type of furnace.

Boron carbide is a very hard abrasive, and this may account for the fact that it was heavily contaminated with iron. It was therefore necessary to purify the carbide by successive digestions with 50% nitric acid, until the extract was no longer deeply coloured. The grade of B_4C finally used was 100 mesh, and was found to be quite satisfactory.

In most instances a flow rate of about 60 mls./min. of chlorine was used and the product of the reaction was a colourless liquid, although on several occasions chlorine also contaminated the product.

2. Purification.

The crude boron trichloride probably contained the following impurities:- CCl_4, from the carbon; $SiCl_4$, from the silica reaction tube; HCl and oxides of boron by hydrolysis of BCl_3; the hydrolysis products of $SiCl_4$; $COCl_2$; and Cl_2.

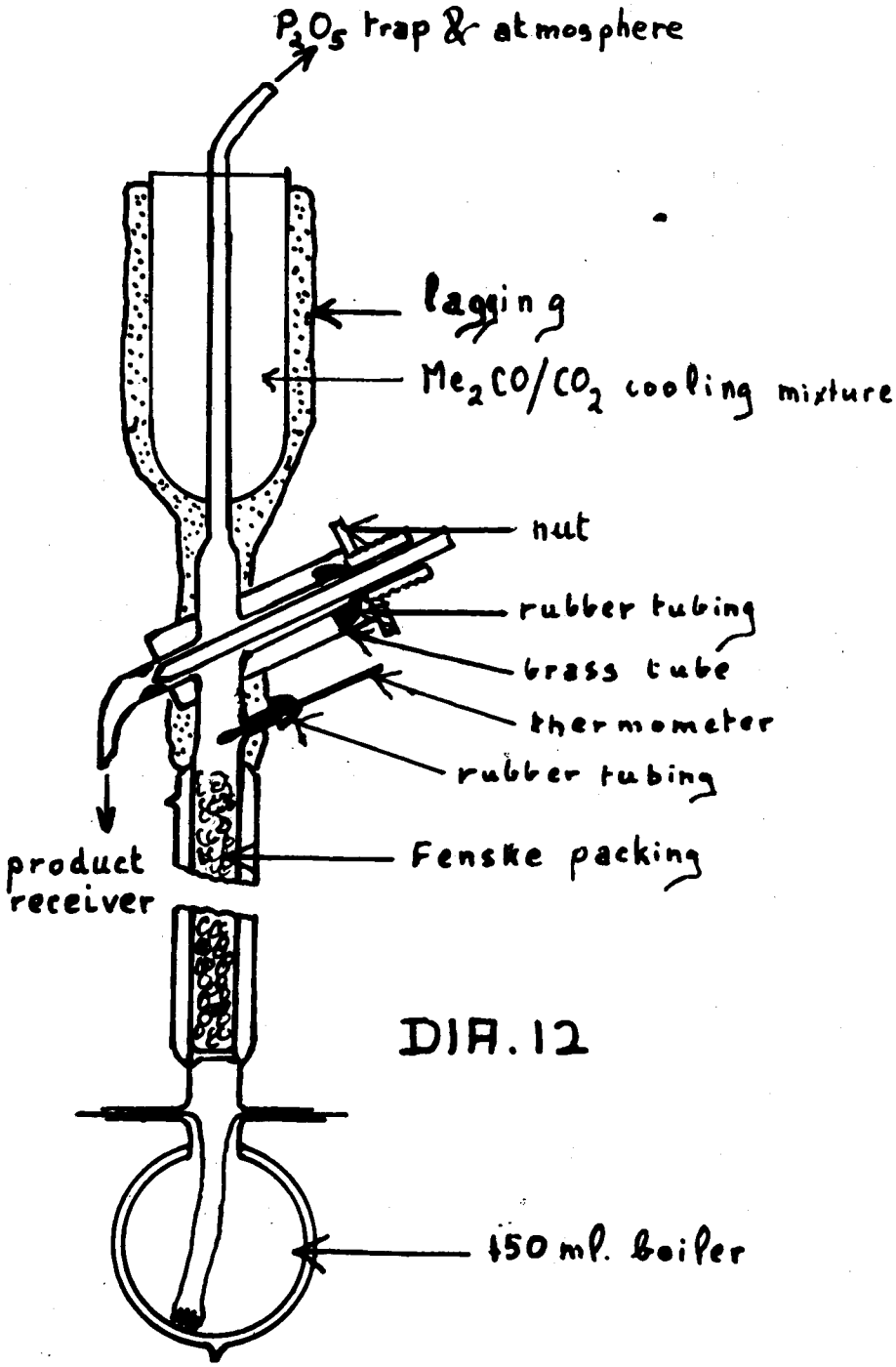
P_2O_5 trap & atmosphere
lagging
Me_2CO/CO_2 cooling mixture
nut
rubber tubing
brass tube
thermometer
rubber tubing
product receiver
Fenske packing
150 ml. boiler

DIA. 12

(i) Chemical Methods of Purification.

A preliminary chemical treatment was attempted. The product was shaken with mercury to remove the chlorine, but this proved rather ineffective owing mainly to the coating of mercuric chloride which formed and prevented further chemical reaction. Tin amalgam was tried with similar results. Metallic calcium was added to remove HCl, and this proved to be quite successful. No further chemical processes were attempted.

(ii) Fractional Distillation.

Those batches of product contaminated with chlorine were purified in an apparatus of the type shown in Diagram 12. This distillation assembly contained no mercury, and glass Fenske helices were used as the column packing. The condenser was cooled by means of an acetone-solid carbon dioxide mixture, and lagged with cotton wool and asbestos cloth. Take-off was by means of liquid partition, through a mechanically controlled ground glass needle valve.

The boil-up rate was about 200 mls/hr., and the reflux ratio about 15 to 1. Distillate between 12° and 15°C. was collected and taken to be boron trichloride.

The distillation was effective in removing Cl_2; also the bulk of the $SiCl_4$ and CCl_4, and all the involatile impurities, remained in the still-pot.

(iii) Vacuum Distillation.

A high vacuum system, of the type first introduced by A.

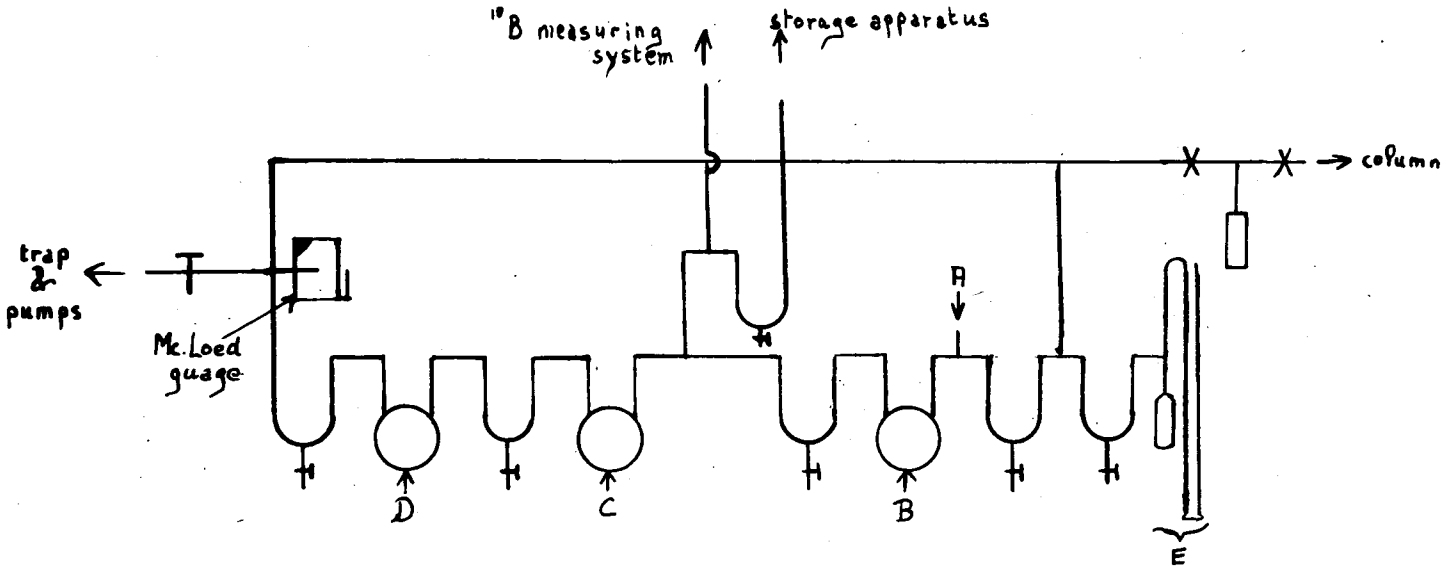
^{10}B measuring system
storage apparatus
column
trap & pumps
Mc. Loed guage
A
B
C
D
E

DIA. 13

Stock (30), was used for handling volatile compounds. The section of the apparatus shown schematically in Diagram 13, was used for the purification of chlorine-free boron trichloride. The impure BCl_3 was distilled into the vacuum system from a vessel sealed on at A. Trap to trap distillation was carried out in the usual manner (30), the temperature of trap B being -78°C.; trap C -107°C.; and trap D being at liquid nitrogen temperature, i.e. -198°C. The vapour pressure of the material from trap C was measured in section E.

3. Purity of Product.

An estimate of the purity of the product was made from vapour pressure measurements at several temperatures. The accuracy of the manometer readings were to about $\pm\frac{1}{2}$ mm., and the temperature to better than 0.1°, near 0°C.

An analysis of the silica content of a sample of boron trichloride, which was known to be slightly impure, vapour pressure 481 mm. at 0°C. (pure BCl_3, 477 mm. at 0°C.), was carried out as follows:-

A known quantity of BCl_3 contained in a bulb was condensed into a small trap containing distilled water. The trap was allowed to warm up to about 1°C. when the chloride reacted with the water forming hydrochloric acid, B_2O_3 and SiO_2.

The contents of the trap were carefully washed into a silica crucible and evaporated to dryness. A mixture of methyl

alcohol (2 vols.) and concentrated sulphuric acid (1 vol.) was then added and gentle heating applied. Boron was removed as methyl borate. This process was continued until the vapour of methyl alcohol gave no green colour on ignition, showing that no boron remained. The contents of the crucible were then taken to dryness, and the crucible heated to a bright red. This removed all the carbon, resulting from charred methyl alcohol, leaving only silica behind. The crucible was allowed to cool in a desiccator and its increase in weight determined.

Results:

Vol. of bulb	=	563 mls.
Pressure of BCl_3 in bulb	=	278 mm.
∴ Wt. of boron in bulb	=	0.09619 gms.
Wt. of crucible empty	=	47.7967 gms.
Wt. of crucible SiO_2	=	47.7999 gms.
∴ Wt. of SiO_2	=	0.0032 gms.
%SiO_2 by wt.	=	$\frac{3.2 \times 28}{962}$ = 3.2%
% Si by wt.	=	$\frac{3.2 \times 28}{60}$ = 1.55%
% Si by atoms	=	$\frac{1.55 \times 10.8}{28}$ = 0.6%

4. Properties of Boron Trichloride.

It has been found that boron trichloride will attack Apiezon wax and greases, and dissolves slowly in Silicone greases. Also the vacuum apparatus became coated on the inside with a thin film of B_2O_3 which was presumably due to reaction with absorbed

water.

Iron, tungsten, and Nichrome were not attacked by boron trichloride, and this was probably due to the self dehydrating properties of such a readily hydrolysable liquid.

VI.

DETERMINATION OF THE RELATIVE ISOTOPE RATIO OF BORON.

A number of possible methods for the determination of the $^{11}B/^{10}B$ ratio are available. The techniques considered are discussed below.

1. Density Method.

Of the various density techniques available; the gradient tube method, the falling drop method, and the flotation method, only the last mentioned is feasible in the boron trichloride case. Briscoe and his collaborators have used the flotation method to determine the density of BCl_3 in their work on the natural variation of the isotopic ratio of boron. This method involved the preparation of two sets of floats with densities slightly above and slightly below the density of the liquid at the proposed temperature of measurement.

The densities of fluids in which these floats were buoyant were determined as a function of temperature over a small range. From observation of the flotation temperature in the BCl_3 samples, densities and thus isotopic ratios were deduced.

The discovery of deuterium and the subsequent need for an accurate method of assaying the H/D ratio, gave rise to further refinements in the flotation technique. A small scale flotation method (for 10 cc of liquid) has been described by Briscoe and his co-workers (31) in which it was possible to measure density differences to $< 2 \times 10^{-7}$ g/c.c. These workers used

silica floats and found that the rate of rise or fall of the float was linearly related to the difference between the flotation temperature (float stationary) and the temperature of the sample being measured.

It should be noted that this method relies for its absolute accuracy on the molecular volumes of the isotopic substances being identical, unless separated material of known composition is available to check the actual relationship between density and isotopic composition. The most serious objection, however, to this technique for use in measuring the $^{11}B/^{10}B$ ratio, is the comparatively large error introduced by a small amount of impurity. The difference in density between pure $^{11}BCl_3$ and $^{10}BCl_3$ is about 1%, (d_{10^o} BCl_3, 1.434).

Thus approximately 0.14% of CCl_4 (d_{20}, 1.595) present would appear as a 10% change in the $^{11}B/^{10}B$ ratio. Small quantities of $SiCl_4$ (d_{20}, 1.493) and HCl would have a similar effect on the value obtained for the isotopic ratio. The same amount of impurity would only appear as a 0.2% change in the ratio, as measured by the neutron absorption method discussed below.

2. Chemical Method.

A number of workers have determined the atomic weight of boron by means of the BCl_3; 3 Ag method. That is, by hydrolysing the BCl_3, adding silver nitrate and weighing

the AgCl produced. Here again, a small amount of impurity will manifest itself as a large difference in the isotopic ratio. This method was used by Briscoe and his school, but later discarded in favour of the flotation method described above.

3. Mass Spectrometric Method.

During this work it became possible to have a mass spectrometric assay made of the boron trichloride prepared for this work. The vapour pressure of the sample sent for analysis corresponded to that given for BCl_3 by Stock and Priess (32). The results obtained on an enriched sample of boron trichloride are given in Table IV.

TABLE IV.

Mass	Ratio	Ions
$\frac{81}{80}$	5.36	$\frac{^{11}B\,^{35}Cl_2}{^{10}B\,^{35}Cl_2}$
$\frac{46}{45}$	4.44	$\frac{^{11}B\,^{35}Cl_2}{^{10}B\,^{35}Cl_2}$
$\frac{11}{10}$	5.36	$\frac{^{11}B}{^{10}B}$

('Natural' $^{11}B/^{10}B$ ratio = 4.3)

A great number of peaks due apparently to the formation of stannic chloride in the spectrometer, were also found. This stannic chloride presumably arises as a result of the reaction of hydrochloric acid and chlorine (formed by the decomposition of BCl_3) with the tin in the solder used in the construction of the spectrometer. Tin has ten stable isotopes, and if account is taken of the association of these with different arrangements of the chlorine isotopes, and of the possible existence of multiply-charged ions, a very wide range of mass numbers can be accounted for. The discrepancy between the $(B^{35}Cl)^+$ ratio on the one hand, and those for B^+ and $(B^{35}Cl_2)^+$ on the other could possibly be accounted for by the presence of $(^{120}Sn\ ^{35}Cl_3)^{5+}$ ions, which would coincide with $(^{10}B^{35}Cl)^+$ at mass 45. In any case the whole spectrum is so complex that little useful quantitative work seemed possible with it. Osberghaus (33) has recently investigated the use of BCl_3 in a mass spectrometer, and arrived at a similar conclusion.

Since boron trifluoride is a suitable material for mass spectrometric work, the conversion of BCl_3 to BF_3 was considered. This reaction can be carried out using silver fluoride at 200°C. as the fluorinating agent. The disadvantages of such a process are: that partial enrichment of one of the isotopes might occur if the reaction were not carried to

completion; Urey predicts a value of approximately 1.06 for the equilibrium constant of this exchange reaction. It is likely that some SiF_4 would be introduced as an impurity; this is a substance which is known to be difficult to remove from BF_3, and the $^{29}SiF_2^{2+}$ peak would overlap that for $^{10}BF_3^{+}$, with the obvious resulting uncertainties.

4. Neutron Absorption Method.

^{10}B is characterised by a capture cross-section for thermal neutrons considerably greater than any other nuclide likely to be present, and this has been made the basis of a method for comparing the ^{10}B contents of samples of boron compounds. Table V shows the magnitude of the capture cross-section for substances likely to be encountered; it will be seen that the neutron absorption effect will depend essentially on the ^{10}B concentration and that such a method will be comparatively insensitive to the presence of impurities.

TABLE V.

Nuclide	σ_c (barns) for thermal neutrons
^{10}B	3835
^{11}B	0.05
Cl	32.7
Si	0.25
C	0.005
O	0.002
H	0.31

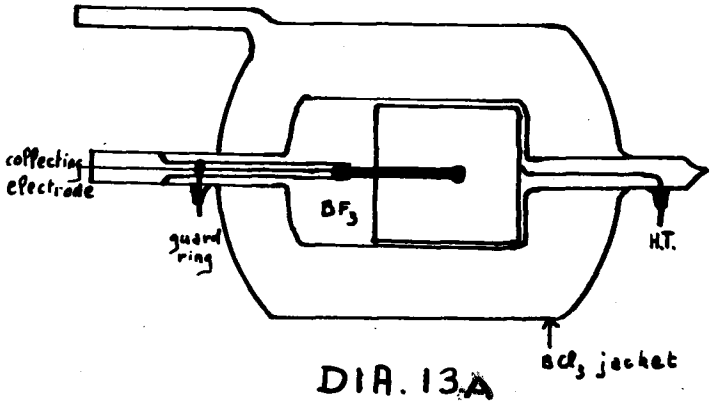

DIA. 13A

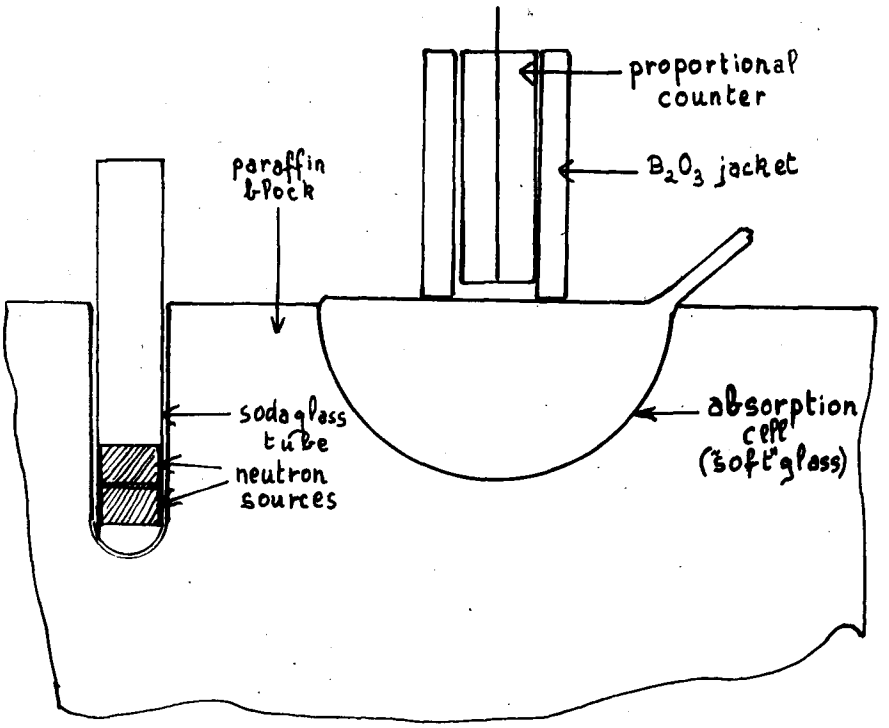

DIA. 14

Apart from this obvious advantage, it may be noted that this technique employs essentially standard neuclear physical apparatus, and that samples, after measurement, can be recovered unchanged. This method has yielded quite satisfactory results. The sample whose mass spectrum is quoted in Table IV gave results by this technique in excellent agreement for the isotopic ratio as obtained from mass ratios corrosponding to 81/80 and 11/10peaks.

(i) Absorption Cell and Counter Arrangement.

The most convenient arrangement for the measurement of slow neutron absorption made use of a BF_3 filled neutron counter surrounded by a jacket which can be evacuated and filled alternatively with a natural or an enriched sample of boron trichloride. Initially the apparatus shown in Diagram 13 was used, in which the neutron counter was a non-multiplying ionisation chamber filled with boron trifluoride gas. Unfortunately this chamber did not give a satisfactory counting characteristic curve, presumably on account of its rather poor ratio of linear dimensions to range of the α particles from the reaction:

$$^{10}_{5}B + ^{1}_{0}n \longrightarrow ^{4}_{2}He + ^{7}_{3}Li$$

which is the mechanism of detection of slow neutrons used. As a result, the neutron detection efficiency was somewhat dependent on rather difficultly controllable factors such as the exact mains supply voltage for the associated electronic equipment, and reliable results were very difficult to obtain.

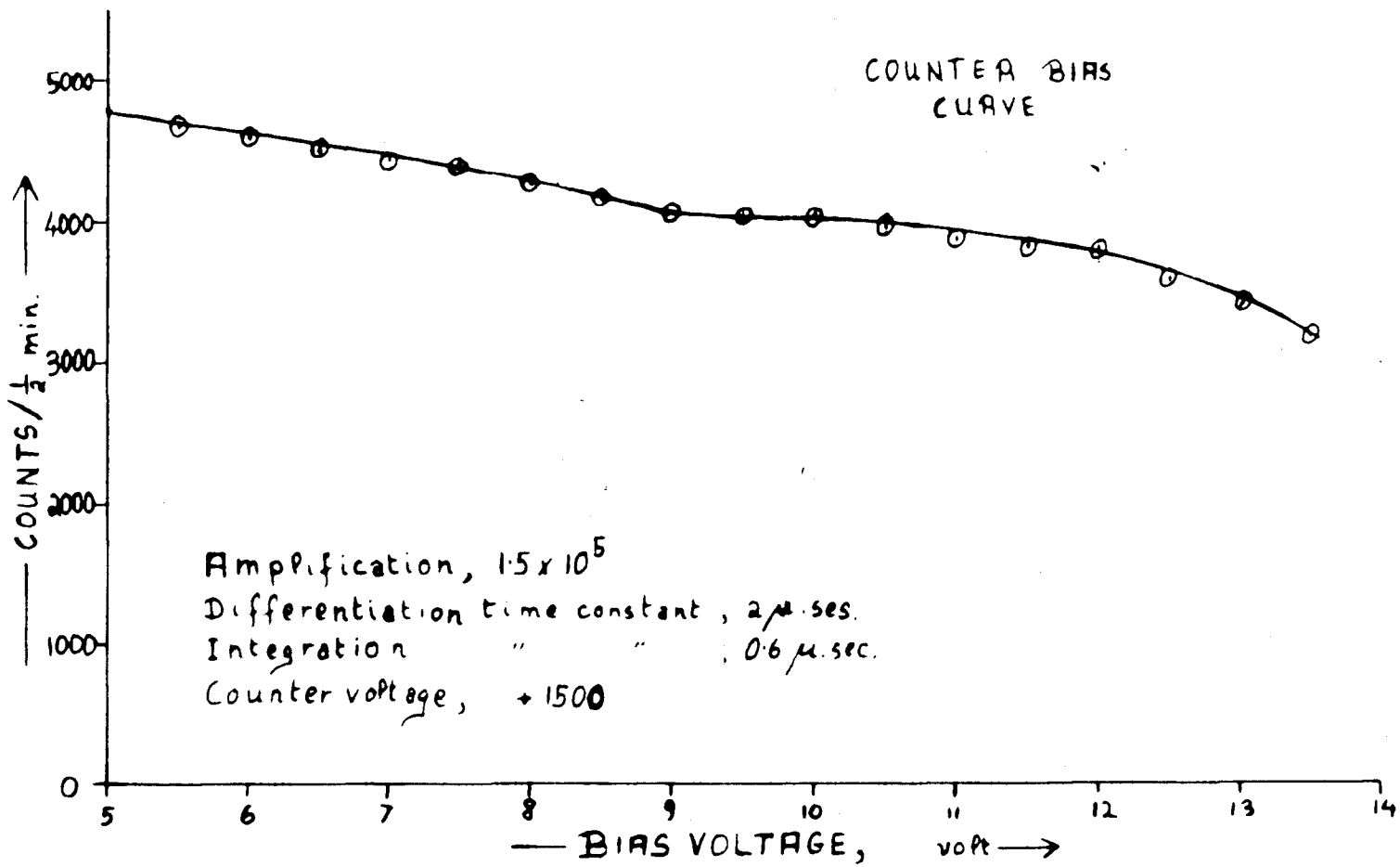
COUNTER BIAS CURVE
COUNTS/½ min.
5000
4000
3000
2000
1000
0
5
6
7
8
9
10
11
12
13
14
BIAS VOLTAGE, volt
Amplification, 1·5 x 10^5
Differentiation time constant, 2 μ.ses.
Integration " " , 0·6 μ.sec.
Counter voltage, + 1500

FIG. IV

A far more satisfactory alternative scheme is shown in Diagram 14. A BF_3 - filled proportional counter* was used, and was found to give a substantial 'plateau' region on its characteristic curve, Fig. IV, which must result in effective freedom from variation of sensitivity with small changes in operating conditions. In fact, excellently consistent results were obtained with this set-up. The counter available was rather long (10" active volume) and the most effective absorption path length : volume ratio was thought to be obtained with a roughly hemispheral chamber ($\sim$125 cc) fitted into the top of the paraffin block in which a neutron source (1g Ra + 10g Be) was also placed, see Diagram 14. Direct access of neutrons to the counter without passing first through the absorption chamber was prevented by encasing the counter tube in a cylinder packed with sufficient B_2O_3 to attenuate the neutrons incident upon it, by a factor of at least 200. In order to maintain a constant geometrical relationship, the neutron source, absorption cell, and counter were rigidly fixed relative to one another, and to the paraffin block.

The counter tube was filled with BF_3 to a pressure of 16 cm. of mercury.

---

* We are grateful to the Atomic Energy Research Establishment, Harwell, for the loan of this counter tube.

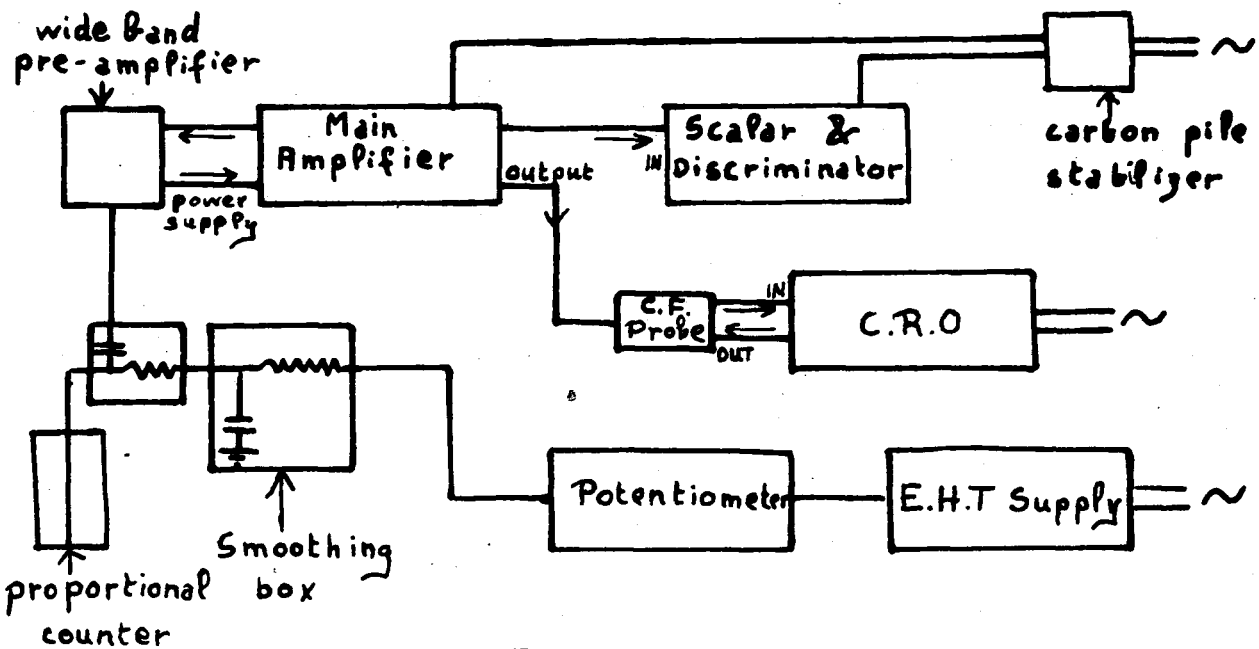
wide Band
pre-amplifier
power
supply
Main
Amplifier
output
IN
Scalar &
Discriminator
carbon pile
stabiliyer
C.F.
Probe
IN
OUT
C.R.O
Potentiometer
E.H.T Supply
Smoothing
box
proportional
counter

DIA. 15

(ii) Associated Electronic Equipment.

This is shown schematically in Diagram 15.

a) E.H.T. Supply: this is derived from an electronically stabilised power unit which delivers d.c. at 2200 v., the stability being better than 0.1% under normal conditions. The exact voltage needed for operation of the proportional counter was obtained from a potentiometer connected across the supply; residual 50 ∿ ripple on the output was less than 0.01 v. This was reduced still further by an additional filter circuit (0.1 μfd with 100 KΩ series resistance) placed near to the actual counter tube. Considerable care had to be exercised in the treatment of insulating surfacesto eliminate spurious pulses arising from local insulation failures; polystyrene was used wherever possible.

b) Amplifier. Pulses from the proportional counter (whose anode was at the high potential) were fed through a well insulated R - C circuit (1 μsec. time constant) to a wide-band pre-amplifier giving a gain of 100 times.

The output from this pre-amplifier was further amplified by an a-c coupled linear amplifier capable of an additional gain of 16,000. Adequate output pulse amplitude was obtained with a gain of 1.5×10^5. Controls were available to adjust the overall gain, the time constants of response of the amplifier, and the polarity of the output. The complete amplifier consisted essentially of three 'ring-of-three' circuits, with

negative feedback over each ring. Power was provided by an electronically stabilised supply which was run from the mains through a carbon-pile voltage regulator for additional stability.

c) Recording Unit. Pulses from the proportional counter, after amplification, were fed into a pulse amplitude discriminator, which could be set to differentiate between genuine events, and spurious circuit 'noise', and thence to a scale-of-100 circuit driving a mechanical counting meter.

d) Oscilloscope. The amplifier output was also displayed on a cathode ray oscilloscope, which gave a most useful visual check on the performance of the apparatus, and provided a satisfactory criterion for rejection of results which were, for example, invalidated by microphonic interference.

(iii) Procedure Used for Determining Isotopic Ratio.

For a measurement of the fractionation produced by the column two samples were required: one drawn from the still-pot, and the other from the top of the column, both being taken after the column was substantially in equilibrium. If the column was running with 'feedback', the still-pot sample was withdrawn last, after the recycling pump had been stopped, to ensure that the sample was not contaminated by enriched material being returned to the boiler. The two samples were purified following the treatment outlined on page42, and a very careful check of their

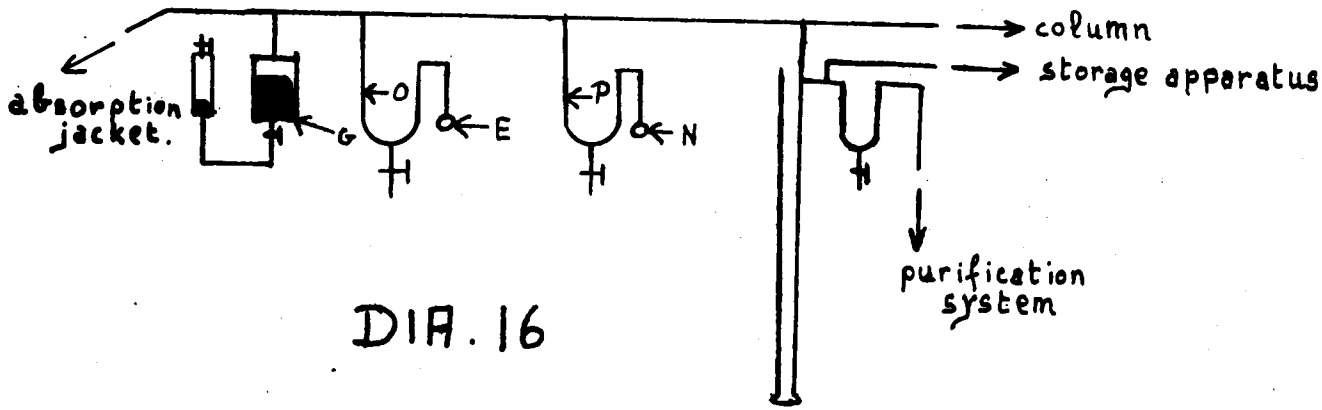
column
storage apparatus
absorption jacket.
G
O
E
P
N
purification system

DIA. 16

vapour pressures made. Not until the vapour pressures corresponded to that of pure BCl_3 at -78°C., 0°C. and 10°C. were the samples considered fit for analysis.

The pure specimens were distilled into the bulbs E and N in the vacuum system shown schematically in Diagram 16. The procedure employed in determining the relative ^{10}B content of BCl_3 samples, follows:-

a) The samples were kept frozen in the bulbs E and N, with the valves O and P closed, and the entire system evacuated. The transmission of neutrons through the empty absorption cell was measured for half-an-hour.

b) The valve O was opened and the BCl_3 allowed to volatilize filling the absorption cell and the rest of the system. The pressure of gas was roughly adjusted to that required, valve O was closed and the pressure then adjusted accurately to the desired value by means of the pipette, G. The temperature was noted and a half-hour count taken.

c) The BCl_3 was condensed back into E, the valve closed, and the same procedure as (b) carried out with the other specimen.

This represented one cycle of operation.

It will be shown in the following section that the logarithmic reduction in apparent neutron intensity ($\log\frac{I_o}{I}$) is proportional to the aggregate nuclear cross-section of the sample in

the absorption cell, and, with appropriate allowance made for the (comparatively small) contribution from $^{11}BCl_3$ this provides a measure of the ^{10}B concentration in the sample. Due allowance is, of course, made for slight changes in temperature and pressure from one measurement to another.

VII.

RESULTS.

1. Reproducibility of Counting Measurements.

As a check on the reliability of the method for estimating ^{10}B concentrations, a series of 60 3-minute measurements was made with the absorption cell alternately empty and full of natural BCl_3, thus making a set of 30 estimates of the neutron intensity and also a set of 30 counting ratios representing, in effect, 30 estimates of the boron concentration in the absorption cell. These results have been subjected to statistical analysis.

The mean counting rate recorded with cell evacuated was 10343 per 3 minute interval. One would thus expect to find, on the assumption that the only errors were the random sampling errors associated with the disintegration process, that the standard deviation would be $10343 = 101.7$. In fact, the observed root mean square deviation is 115.5, which is not significantly greater. This has been checked by the application of the χ^2 test; for the 30 "cells", having therefore 29 degrees of freedom, χ^2 is 38.7. From the table of χ^2 given by Fisher (34), one obtains $P = 0.10$ for 29 degrees of freedom and $\chi^2 = 39.1$. There is thus no criterion for rejecting an hypothesis as to the absence of other random errors.

This result is important, since it justifies a considerable relaxation of the counting routine, rendering it unnecessary to take readings at such frequent intervals. The routine eventually used involved 9, 30-minute counts in a rotation with, (a) cell evacuated, (b) cell filled with 'natural' BCl_3 and, (c) cell filled with 'enriched' BCl_3. This cycle of measurements was repeated until sufficient statistical accuracy was obtained.

The χ^2 test was also applied to the logarithmic reduction in counting rate observed with the 30 measurements made with the cell filled with BCl_3. (These measurements were made at as nearly as possible constant temperature and pressure, and the results corrected to standard values of 17°C. and 635 mm. respectively).

In this case the mean value of the logarithmic reduction was 0.0691, with r.m.s. deviation 0.0130, compared to a calculated value of 0.0141. χ^2 for this set of measurements was evaluated and found to be 25.5., corresponding to a value of 0.60 for P; i.e. there is, statistically, a 60% probability that a value greater than this would have been found. The validity of the techniques for counting and for filling the absorption cell therefore seem well established.

It may be added that the day-to-day stability of the apparatus is not involved at all, since the cycle of counting

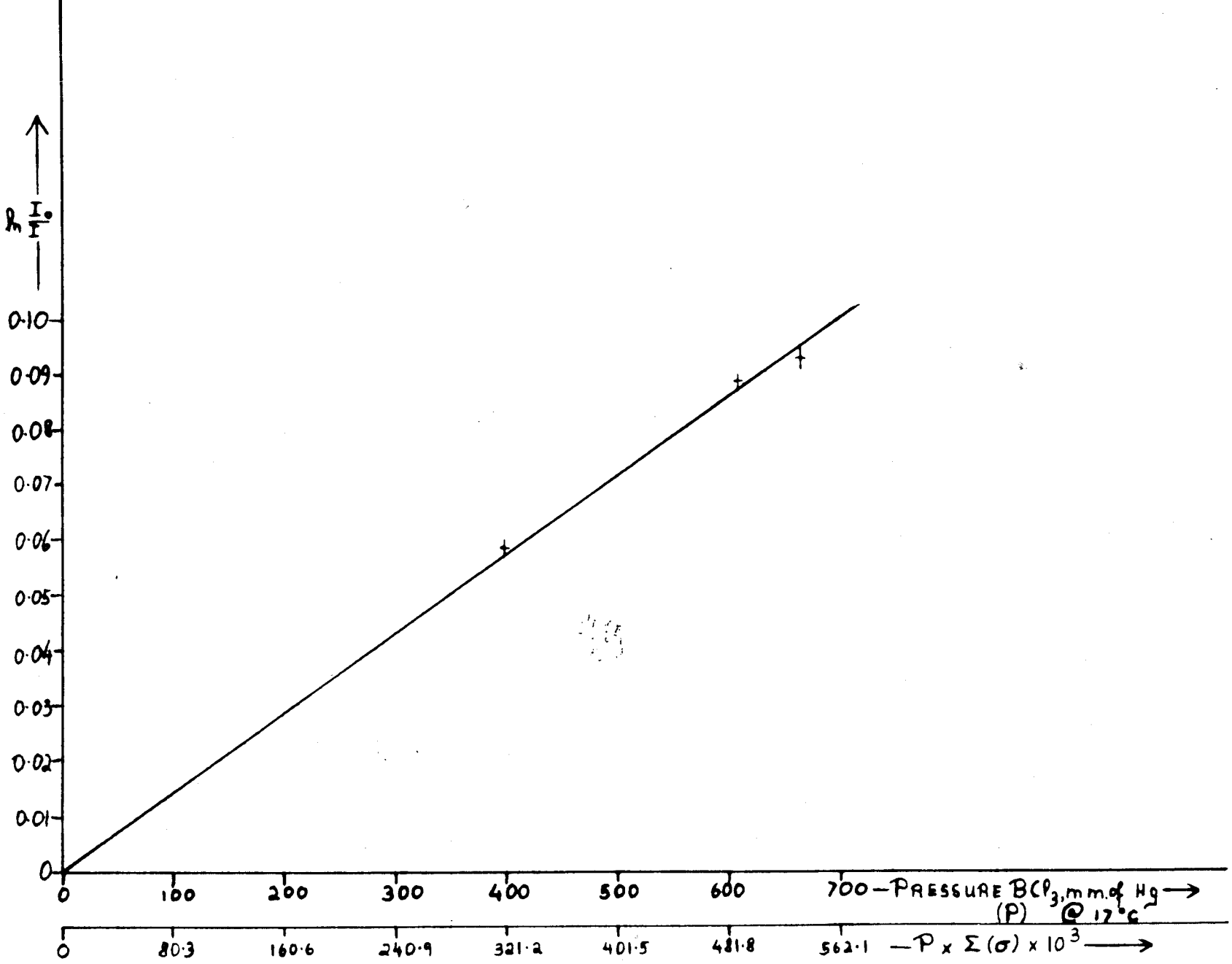
$\ln \frac{I_0}{I}$
0·10
0·09
0·08
0·07
0·06
0·05
0·04
0·03
0·02
0·01
0
0
100
200
300
400
500
600
700 — PRESSURE BCl_3, mm. of Hg (P) @ 17°C →
0
80·3
160·6
240·9
321·2
401·5
481·8
562·1
— $P \times \Sigma(\sigma) \times 10^3$ →

FIG. V

operations was always arranged to include corresponding samples from top and bottom of the column; the ratio of ^{10}B contents (which is needed to evaluate α) should therefore be independent of any long-term variations in calibration.

2. Relationship Between Neutron Absorption and ^{10}B Concentration.

In the ideal case, with a parallel beam of neutron and good geometry, one would expect an exponential reduction of neutron intensity with increasing "nuclear density" of the absorbing material. The experimental set-up actually used by no means achieved perfection of geometrical arrangement, but, by the use of a roughly hemispherical absorbing chamber, nearly equal path lengths in all directions could be expected.

In Figure V. is plotted the logarithmic reduction in neutron intensity as a function of pressure of natural BCl_3 in the absorbing cell and it will be seen that the assumption of exponential absorption is in fact justified. It is clear that an equal effect would be produced by any absorber of equivalent aggregate nuclear cross-section, and that, to the extent that the neutron cross sections of other nuclei are negligible compared to that for ^{10}B, the logarithmic reduction will be proportional to the ^{10}B content of samples measured at constant temperature and pressure.

In fact, this simplification is hardly justified, as will

be clear from Table V. The neutron absorption cross section of Cl is not negligible, and the effective cross section for BCl_3 of x atom percent ^{10}B will be

$$\left(3835\frac{x}{100} + 0.05\left(1-\frac{x}{100}\right) + 3 \times 32.7\right) \text{ barns.}$$

We can therefore write

$$K \ln\frac{I_o}{I} = p\left(3835\frac{x}{100} + 98\right)$$

or

$$x = \frac{100}{3835}\left(\frac{K}{p}\ln\frac{I_o}{I} - 98\right)$$

the ^{11}B contribution having been neglected. The proportionality constant K can be evaluated using the data for natural BCl_3 (^{10}B = 18.4%).

In this expression I_o and I are the measured neutron intensities with the absorption cell respectively empty and full and p is the pressure of BCl_3 in mm. Hg.; a value of 5.65×10^5 (barns x mm. pressure) has been obtained for K in our particular arrangement.

For use in Cohen's equation, relating fractionation to production, isotope ratios rather than single isotope percentages are needed:

$$\frac{r(O)}{r(Z)} = \frac{N_o/(1-N_o)}{N_z/(1-N_z)}$$

and account must be taken of the change in ^{11}B resulting from the ^{10}B change in the fractionat on. This would be a mere formality were the natural ^{10}B percentage not so large. If R is the ratio of ^{10}B content at the top and bottom of the column ($= N_0/N_Z$), then

$$\phi = \frac{r(0)}{r(Z)} - R\,\frac{(1-0.184)}{(1-0.184R)} = \frac{0.186}{1-0.184\,R}$$

assuming that the still-pot charge has essentially the natural boron ratio.*

3. Results of Distillation.

The experimental data from which α is calculated consist of ratios of boron-10 contents of samples taken from top and bottom of the column when running (a) under total reflux and (b) with a predetermined rate of take-off. Nine cycles of half-hour neutron counts were made on each pair of samples; quoted errors are experimental standard deviations, and are in good agreement with values calculated assuming a Poissonian distribution. The results are summarised in Table VI.

---

* Small deviations from this assumption will not introduce appreciable errors.

TABLE VI.

(a) Runs under total reflux.

Time of sampling	Pressure of measurement	Mean % reduction in counting rate: Still pot sample	Mean % reduction in counting rate: Condenser sample	^{10}B concentration ratio R_o	$\phi = \frac{0.816R_o}{1-0.184R_o}$
48 hrs.	440 mm.	6.125	4.914	.8023 ± .0484	0.726 ± .054
144 hrs.	530 mm.	5.954	4.808	.8076 ± .0178	0.731 ± .020

Weighted Mean of ϕ = 0.730 ± 0.015.

(b) Runs with take-off.

Time of sampling	Pressure of measurement	Mean % reduction in counting rate: Still pot sample	Mean % reduction in counting rate: Condenser sample	^{10}B concentration ratio R	$\phi = \frac{0.816R}{1-0.184R}$	Production rate
20 hrs	606 mm.	7.931	7.050	0.878	0.854(5) ±0.009	420 ml/hr
20 hrs	596 mm.	6.266	5.805	0.926	0.899 ±0.013	840 ml/hr

The geometry of chamber, source and counter was not necessarily kept constant from one determination of ϕ to the next as will be obvious from the above table.

Boil-up rate throughout = 2.902 moles/hr = 6.51×10^4 ml/hr.

4. Calculation of α and Column Platage.

Since α is clearly very near to unity, and p the fraction of the total flow drawn off is small, Cohen's equation relating fractionation to production (equation (2) p.14) can be re-written:

$$\phi = \frac{\theta' - 1}{\theta' - \phi_o(\theta' - 1)}$$

($\theta' = -\theta$, the substitution being necessary to make Cohen's nomenclature conform to Urey's (8).)

Substitution of ϕ_o and ϕ into this equation gives, by successive approximation, a value of θ', where

$$\theta' = \frac{p}{1-\alpha}$$

Knowing p, α may then be deduced. Furthermore under total reflux,

$$\phi_o = (\alpha)^n$$

where n is the number of equivalent theoretical plates in the column, and this quantity can, therefore also be deduced.

TABLE VII.

Evaluation of .

Run No.	P ml/hr	p x10^3	ϕ	θ'	α	Mean
1	420	6.47	0.8545±0.009	5.4±0.6	0.9988±0.0001	0.9987±0.0001
2	840	12.94	0.899±0.013	9.2±1.5	0.9986±0.0002	

Substituting this value into the relationship

$$\phi_0 = \alpha^n$$

we obtain <u>n = 242 plates</u>, with a standard deviation which is rather high, ± 20 plates, on account of the small value of $(1-\alpha)$.

5. Errors in Results.

By partial differentiation, values of $\frac{\partial \phi}{\partial \theta'}$, and $\frac{\partial \phi_0}{\partial \theta'}$, can be obtained, from which one can deduce $\frac{\partial \theta'}{\partial \phi}$ and $\frac{\partial \theta'}{\partial \phi_0}$. Using the numerical values of these quantities, in the general formula for the propagation of errors, we obtain:-

$$\sigma^2_{\theta'} = \left(\frac{\partial \theta'}{\partial \phi}\sigma_{\phi}\right)^2 + \left(\frac{\partial \theta'}{\partial \phi_0}\sigma_{\phi_0}\right)^2 + \ldots\ldots\ldots$$

where the σ's are the standard deviations for the quantities indicated by subscripts. In practice, with our results, virtually the whole uncertainty in θ' is attributable to the error in ϕ; all other uncertainties (such as those in the boil-up rate estimation, rate of take-off, etc.) appear to be negligible. Errors quoted in Table VII have been computed from this formula, using the values of the various quantities listed in Table VIII.

TABLE VIII

Error Calculation.

Run	$\frac{\partial \theta'}{\partial \phi}$	$\frac{\partial \theta'}{\partial \phi_0}$	σ_{ϕ}	σ_{ϕ_0}	$\sigma_{\theta'}$	σ_{α}
1	65.7	6.05	0.009	0.014	0.60	0.0001
2	115.0	5.85	0.013		1.50	0.0002

VIII.

DISCUSSION.

A. Practical Aspects.

The degree of enrichment of boron isotopes needed for any particular application will obviously depend quite strongly on the nature of the application. For many nuclear purposes material of perhaps 90% ^{10}B content would be needed, and this could clearly not be achieved with a reaction having an equilibrium constant of 0.9987.

For tracer applications, the concentration needed depends on the degree of dilution to be expected, and on the precision of the method of assay. Mass spectrometric methods for some elements (notably C and O) have been pressed to a very high degree of precision, but in the boron case it appears that an accuracy of ½% in the isotope ratio is about as much as one could expect to achieve without excessive labour. In addition there is also inherent the possibility of slight fractionation occurring during the conversion of the reaction products into BF_3 or some other compound suitable for mass spectrometric work. The neutron absorption technique adopted in this work has proved capable of a precision of about 1% on abundance ratios, and with some elaboration this also could probably be improved by a factor of two or so (e.g. bylonger counting, or

by increasing the thickness of the absorption cell). It seems likely, in fact, that one has to face an error of ½% in the analytical data, however obtained.

The degree of dilution of the tracer is more difficult to specify; biological experiments, for example, frequently result, of necessity, in a very large dilution factor. For the sake of illustration, however, one might consider an exchange reaction in which equal quantities of 'labelled' and 'unlabelled' material were used. At equilibrium this will result in a 50% reduction in the enrichment, and if one wants to observe the rate of approach to equilibrium, measurements will have to be made when the reaction is, say, only ¼ complete. This will then give an 8-fold dilution of the tracer material, and, to achieve a 5% accuracy on the estimate of the degree of completion of the reaction, 'labelled' material originally enriched to about 36% ^{10}B would be needed.

For the BCl_3 distillation, an α of 0.9987 has been measured; to produce material of 36% ^{10}B would require a column of about 620 theoretical plates, and this would certainly need to be subdivided to bring the equilibrium time to a reasonable value. It thus appears that the method is not impossible, provided comparatively small enrichments can be utilised, although even to produce material as described above would require a column of three times as many plates as that used in the present investigation.

B. Theoretical Implications.

The calculation of the equilibrium constants for isotopic exchange reactions by the methods of statistical mechanics has yielded results which are, in general, in remarkably good agreement with experimentally determined values. The method used in making such calculations has already been outlined (II p.8), and it will be remembered that the equilibrium constants are deduced from the partition functions for the various components of the systems.

It is the normal practice, when dealing with systems involving condensed phases, to apply an ideal gas partition function to all of the components. This is necessitated by the absence of an adequate general theory of the liquid state, and justified by the assumption that deviations from ideal gas behaviour, which must be quite considerable in a condensed phase, will be the same for both isotopes involved, and will therefore, cancel when the ratios of the relevant partition functions are considered. It is the aim of this discussion to question this assumption, and to indicate a possible line of attack on the problem.

Such calculations require data on the vibrational frequencies of each of the components involved, in their appropriate phases. For the more abundant isotopes these values are usually available from their infra-red or Raman spectra, but

the data for 'rare' isotopes have mostly to be obtained with the help of the Teller-Redlich product rule (35). This rule implies the invariance of molecular force constants under isotopic substitution, and appears to hold rigorously in the gaseous phase, with the possible exception of some hydrogen/deuterium substitutions. There is reason, however, to question the exact validity of this rule when applied to condensed phases. It is well known that a shift in the molecular frequency occurs on going from the gaseous phase to the liquid or solid phase (36), and there is evidence also that the magnitudes of such shifts on isotopic substitution will not necessarily be those predicted from the Product Rule.

If the fundamental vibrations are simple harmonic in nature, then we can regard the frequency shift on passing from the (unperturbed) gaseous molecule to the same molecule in a liquid or solid environment as equivalent to the algebraic addition of components of the force constants <u>between</u> the molecules to each of the ordinary intra-molecular force constants. If the Teller-Redlich rule is not strictly obeyed in the condensed phase then the additional restoring force can be regarded as being dependent upon the isotopic nature of the molecule. This implies a difference in the 'configurational' energy of the molecules. Such differences can be evaluated in term of the frequency changes which occur for the

two types of molecules on condensation, and will lead to differences between the configurational partition functions of the isotopic species.

The interaction energy between a molecule and the surrounding liquid will depend upon a number of factors. For non-polar molecules the most important of these will usually be the 'dispersion forces', discussed by London (37), which have been considered to be independent of the isotopic composition of the substance, since only 'optical' transition moments are normally included. The small contributions to the interaction energy arising from the dipole moments of infra-red transitions, were not considered in London's original paper. These are of little importance in assessing the total interaction energy, but we are now interested in small differences in energy which would be sufficient to influence isotopic equilibria. It is easy to see, in a qualitative way, that these "infra-red dispersion forces" will in general be different for isotopic molecules, and it will be shown, for the boron trichloride case, that the differences are of the correct order of magnitude.

1. Evaluation of the Configurational Partition Function Ratio.

First of all we shall consider a pair of isotopic one-dimensional harmonic oscillators, and assume true harmonicity for the ground state vibrations. For molecules in the gas phase

which will correspond to unperturbed oscillators, we shall have, taking the zero-point energy as $\frac{1}{2}h\omega$:

$$f = 4\pi^2 m\omega_0^2 = 4\pi^2 m'^2\omega_0'^2$$

and

$$x_0 = \frac{1}{4\pi^2}h/m\omega_0 \; ; \quad x_0'^2 = \frac{1}{4\pi^2}h/m'\omega_0'$$

where f is the restoring force constant (assumed the same for both species); ω_0, ω_0' are the unperturbed vibration frequencies; m, m' the reduced masses; and x_0, x_0' the amplitudes of vibration. The primed quantities refer to the oscillator after isotopic substitution.

In a condensed phase we can regard, to a first order of approximation, the perturbations as resulting in the replacement of f by a new force constant $f+\delta$, we have then:

$$f+\delta = 4\pi^2 m\omega^2 \; ; \quad f+\delta' = 4\pi^2 m'\omega'^2;$$

and

$$x^2 = \frac{1}{4\pi^2}h/m\omega \; ; \quad x'^2 = \frac{1}{4\pi^2}h/m'\omega'$$

where the ω's are the frequencies of the perturbed oscillators, and the δ's represent the algebraic increase in the net restoring force constant resulting from forces between the oscillators in the condensed phase. These may, but need not necessarily, be the same for the two species.

It will be apparent that any interaction energy calculated from the change in molecular frequencies on condensation will have no absolute significance. It is not unreasonable,

however, to regard the isotopic difference between these quantities as representing the differences in interaction of the respective isotopic molecules with their environments. If we consider the oscillator at its extreme displacement, the energy of the interaction will be $\frac{1}{2}\delta x^2$, but to obtain the comparative difference in potential energy it will be necessary first to subtract the change in zero-point energy of vibration which has accompanied condensation. The difference of configurational energies of the extreme displacements, will therefore be given by:

$$\Delta V_{max} = (\tfrac{1}{2}\delta x^2 - \tfrac{1}{2}\delta' x'^2) - (\tfrac{1}{2}h\omega - \tfrac{1}{2}h\omega_0) + (\tfrac{1}{2}h\omega' - \tfrac{1}{2}h\omega_0')$$

$$= \frac{h}{2}\left[\frac{\omega^2 - \omega_0^2}{\omega} - \frac{\omega'^2 - \omega_0'^2}{\omega'} - (\omega - \omega_0) + (\omega' - \omega_0')\right]$$

$$= \frac{h}{2}\left[(\omega - \omega_0) - (\omega' - \omega_0')\right]$$

On the average, however, the interaction between sinusoidal oscillators, being $\sin^2$-dependent, will be only half the quantity, and so the effective difference in configurational energy between the two isotopic substances and their environments will be:

$$\Delta V = -\tfrac{1}{4}h\left[(\omega - \omega_0) - (\omega' - \omega_0')\right]$$

$$= \tfrac{1}{4}h\left[(\omega - \omega') - (\omega_0 - \omega')\right] \qquad (1)$$

The extension of the arguments from a one dimensional-oscillator to a polyatomic molecule with more than one vibrational mode will only require a summation over all the modes of vibration,

counting n-fold degenerate modes n times, as is usual. We then have:

$$\Delta V = \frac{h}{4} \sum_i (\Delta\omega - \Delta\omega_o)_i \qquad (2)$$

where the $\Delta\omega$'s refer to the isotopic frequency shifts for the gaseous and condensed phases respectively. Alternatively, we can write the ratio of the configurational partition functions (38):

$$\frac{Q_\tau}{Q'_\tau} = \exp\left\{\frac{1}{4} \sum_i (\Delta u_o - \Delta u)_i\right\} \qquad (3)$$

where $u = \frac{h\omega}{kT}$ and the summation extends over all the vibrations of the molecules.

Bigeleisen and Goeppert Mayer (39) have given an expression for the vibrational contribution to differences in free energy of formation of isotopic molecules from their atoms, which is valid for almost all isotopic exchange reactions, in the form:

$$\frac{\Delta F_o - \Delta F'_o}{RT} = -\sum_i \left[\left(\frac{1}{2} + \frac{1}{e^u - 1} - \frac{1}{u}\right)\Delta u\right]_i + \ln s/s' \qquad (4)$$

the term appearing after the summation sign, $\left(\frac{1}{2} + \frac{1}{e^u - 1} - \frac{1}{u}\right)$, denoted G(u) has been tabulated by them and considerably lightens the task of making such calculations; s/s' is the ratio of the symmetry numbers of the two species. If this is combined with equation (2) above, we shall obtain an expression for the difference between the total free energy of formation

of the isotopic molecules from the free atoms, given as:-

$$\frac{\Delta F_0 - \Delta F_1}{RT} = -\sum_i G(u)\Delta u_i + \frac{1}{4}\sum_i (\Delta u - \Delta u_0)_i + \ln s/s' \qquad (5)$$

This expression should give a more reliable estimate of $\ln\alpha$, where the data are available, then one which ignores the configurational contribution entirely.

The ratio of the symmetry numbers, no matter what its value, will not lead to isotopic enrichment since it merely represents the relative probabilities of forming symmetrical and unsymmetrical molecules. We can, therefore, ignore the last term in equation (5).

Implicit in the foregoing equations is the assumption that the rotational partition functions will have reached classical values, and will therefore contribute nothing to the calculated equilibrium constant. This assumption is justified where the temperature is relatively high (probably room temperature or higher), and when cases other than those of hydrogen exchange are considered.

2. Application to Isotopic Exchange Reactions.

It is evident that for those systems which can be regarded as approximating in behaviour to ideal gases, the configurational term, $\frac{1}{4}\sum_i(\Delta u-\Delta u_o)_i$, in equation (5), will vanish. Thus if none of the molecules taking part is subject to intermolecular interactions, u_o and u will be identical for both isotopes and for all vibrations. No correction will therefore be required for gases at moderate pressures.

Strictly, the configurational term should be included when exchange between substances in the gas phase and ions in solution are considered. Two difficulties arise in this connection: firstly, that the 'unperturbed' frequencies are purely hypothetical and cannot be measured. This difficulty can be overcome since only the difference between the unperturbed frequencies of the isotopic molecules is needed, and this will be very nearly equal to the frequency shift predicted by the Product Rule. The difference calculated in this manner will be in error only to the same (fractional) extent as the fractional difference between u_o and u, and this is always small. The second difficulty is the purely experimental one that for nearly all isotopic exchanges of interest the less abundant isotope is so rare that its vibrational spectrum has not been observed. The frequencies of the "rare" isotope have,

in fact, been calculated from the Product Rule, and clearly, if these values are used, the configurational term will necessarily vanish. It might well be thought extraordinary that such good agreement has been obtained between experimental and predicted equilibrium constants for these reactions, since no allowance has been made, specifically, for interactions in the liquid phase. Two reasons may contribute to this state of affairs: a), the interactions which arise from isotope-dependent factors may well be swamped by the ion-dipole interactions with the solvent, so that, in fact, these ions do obey the Teller-Redlich rule even in the condensed phase, and b) when G(u) is equal to 0.25 (i.e. u = 3.6) equation (5) reduces to the same form as is implied by the use of the calculated frequencies for the less-abundant isotope. u = 3.6 corresponds to a frequency of about 800 cm^{-1} at room temperature, and, since the relevant frequencies in the ions considered are mostly of this order of magnitude, no great error will have been introduced by the use of calculated frequencies. Actually, it is possible that, if experimental values had been available, the agreement between calculated and experimental values would not have been as good as was the case. Now that quite large quantities of enriched stable isotopes are available, it would be extremely interesting to check this point experimentally,

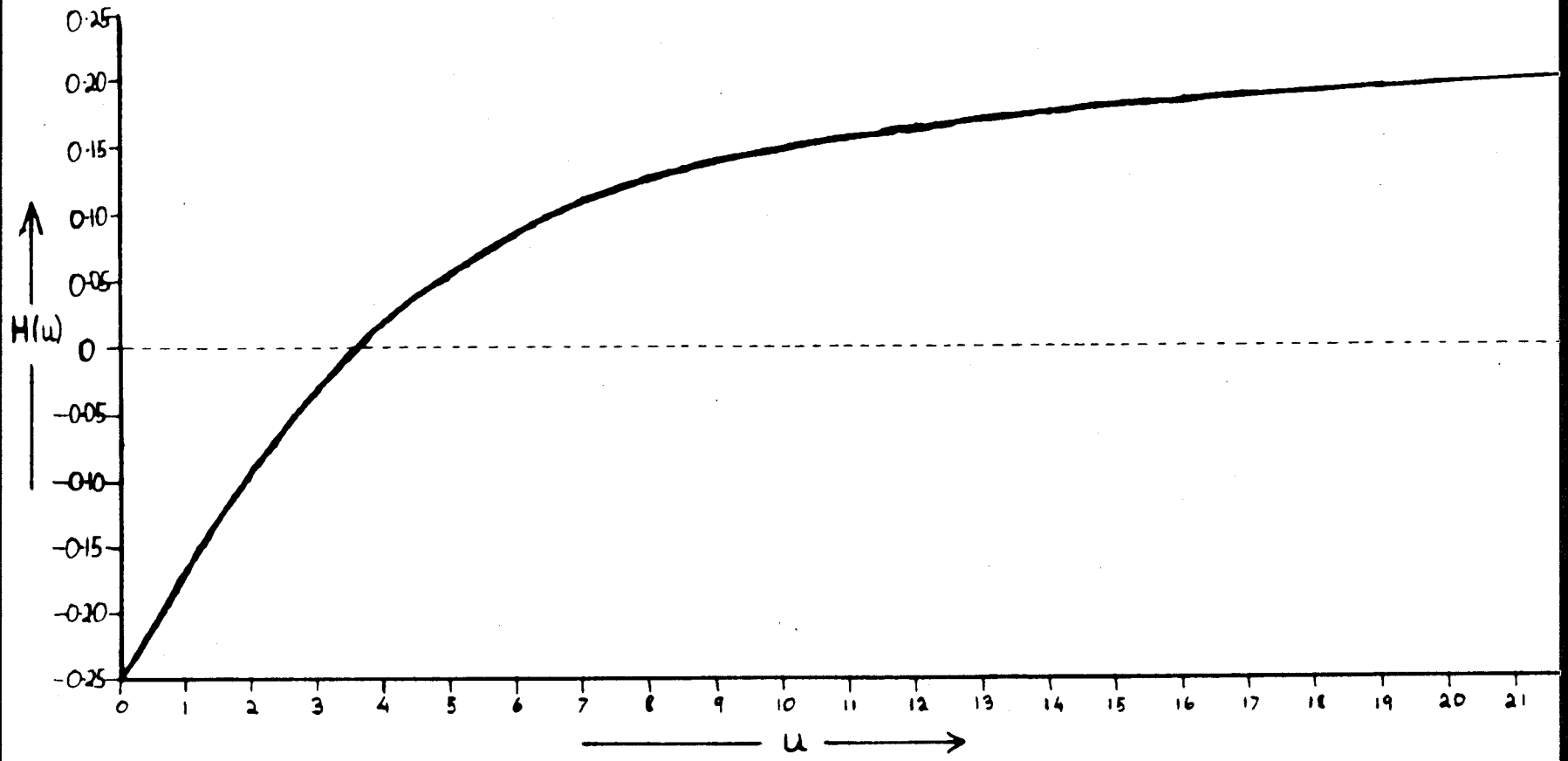
0·25
0·20
0·15
0·10
0·05
H(u)
0
-0·05
-0·10
-0·15
-0·20
-0·25
0 1 2 3 4 5 6 7 8 9 10 11 12 13 14 15 16 17 18 19 20 21
u

FIG. VI

for example, by a determination of the vibrational frequencies of the $^{13}CO_3^{--}$ ion in solution.

3. Application to the Calculation of Vapour Pressure Ratios of Isotopic Substances.

The configurational effect will show up most strongly in the calculation of the differences in vapour pressure to be expected between isotopic substances. Equation (5) can now be rewritten:

$$\ln \alpha = - \sum_i \left[H(u) \left\{ \Delta u_g - \Delta u_l \right\} \right]_i \qquad (6)$$

where Δu_g and Δu_l are the isotopic shifts in u in the gas and liquid state respectively. For small separations, such as are generally obtained in practice, this equation gives $1-\alpha$ directly α being the relative volatility of the isotopic species. The factor H(u) is analogous to the G(u) factor tabulated by Bigeleisen and Goeppert Mayer (39), differing only by an added constant of 0.25. The plot of H(u) against u is shown in Figure VI, and it will be noted that a vibration for u = 3.6 contributes nothing to the fractionation, since H(u) is then zero. For a given value of $(\Delta u_g - \Delta u_l)$ the fractionation will be of opposite sign, depending on whether u is greater or less than 3.6.

4. Quantitative Test of Theory.

As mentioned before, there is a paucity of spectral data for the "rare" isotopes. Urey (8), in fact, quotes no such

data for the ion/gas exchanges which he evaluates, and therefore it is impossible to make any assessment of this theory for such systems.

It has already been indicated (II, p.10) that of all the possible substances, boron trichloride is the most promising for a trial of the above theory. The molecular frequency data for boron trichloride given by Anderson, Lassettre and Yost (40) are quoted in Table VI. Urey (8) has calculated from these data the ratios of the vapour pressures to be expected at various temperatures; at the boiling point, one can interpolate from his results the value 1.014.

TABLE IX

**	ν_1	ν_2	$\nu_3(2)$ *	$\nu_4(2)$ *
$^{10}BCl_3(l)$	471	(471.5)†	989	253
$^{11}BCl_3(l)$	471	451	946	253
$^{10}BCl_3(g)$	471	(483)†	996	243
$^{11}BCl_3(g)$	471	462	958	243

† : calculated from the Teller-Redlich rule.

* : These vibrations are doubly degenerate.

** : ν can be regarded to be the same as ω for the fundamentals where the effect of anharmonicity will be negligible.

A calculation made from equation (6) gives a value, taking the same frequency data as Urey, of 1.003, and, in fact, the value of the equilibrium constant obtained (Chapter VII) was 0.9987. This, then, would appear to provide a measure of support for the idea put forward here, although some uncertainty still exists in that the value of ω_2 for $^{10}BCl_3$ in the liquid phase was obtained by calculation. It is possible that the actual shift here would be in such a sense and of such a magnitude as to exactly compensate the enrichment predicted from the shift in ω_3 (ω_1 is completely, and ω_4 almost completely inactive in this respect). This, however, would appear to be unlikely, in view of the recently reported (41) frequencies for BF_3 in the crystalline form, where ω_2 shows a shift of the same sign as, and comparable magnitude to that shown by ω_3. In fact, if we assume that this also is the case for BCl_3, it will increase still further the fractionation predicted by the use of vibrational partition functions only, but will reduce to slightly below unity the value predicted by this theory. This arises because u_3 lies slighly above the point at which the sign of H(u) changes, whereas u_2 lies slightly below it. A shift of the same sign in u_2 and u_3 will therefore provide contributions of opposite sign towards the total fractionation.

5. Estimation of the Interaction Energy.

If the mechanism suggested before - we can refer to it as the operation of infra-red dispersion forces - is the true cause of the anomolous isotope shift in the liquid phase, it would be of interest to attempt to correlate these forces with the difference in heat of vapourization needed to account for the divergence between Urey's calculated α and the experimental value.

It is interesting to note that BCl_3, is a molecule of the type having quite strong intrinsic bond dipoles, but, on account of its planar trigonal symmetry, no resultant electric dipole moment in its equilibrium configuration.

Distortion of the molecule resulting from infra-red vibrations will, however, destroy this symmetry, and leave a net dipole moment. An evaluation of the magnitude of these moments (for molecules having only their zero-point energy of vibration in each mode) will enable us to estimate the interaction energy.

A rigorous calculation of this type is somewhat difficult, since there is little information about the type of packing of boron trichloride molecules in the liquid, and not much more about the transition moments. It will be seen from Table IX that isotope shifts occur only for ω_2 and ω_3 and that the other fundamentals are inactive in this respect. Thus the

problem will be to evaluate the amplitudes of the oscillating dipoles which are associated with the ground states of ν_2 and ν_3.

(i) Estimation of Transition Moments from Spectral Data.

E.Bright Wilson and his collaborators (42) have shown how, from the absolute intensities of the chief infra-red absorption bands, it is possible to calculate molecular transition moments. This technique has been used to obtain the value of the transition moments for ν_3, using the absorption curve given by Scruby, Lacher and Park (43): unfortunately the only fundamental measured by these workers was ν_3.

The method consists, briefly, in integrating over the whole width of the band, the function

$$\ln(T_0/T)d\nu$$

which gives the integrated apparent absorption β, defined by

$$\beta_3 = p.L.B_3 = \ln(T_0/T) \qquad (7)$$

(L = cell length.

p = pressure of absorbing gas).

The true value of B is, strictly, to be obtained by extrapolation to zero pressure of the β vs. p x L curve; the limiting slope defining the true absorption coefficient A. This is then related to the transition moment by

$$A_3 = \frac{8\pi^3 N.\nu_3}{3hc}|\mu_3|^2 \qquad (8)$$

The absorption spectrum reproduced by Scruby, Lacher and Park (43) enables one to estimate this function. By graphical integration, $B_3 = 639 \times 10^{10}$ cycles/cm.-atm. was obtained; corrected to 100% $^{11}BCl_3$, this gives $B_3 = 784 \times 10^{10}$ cycles/cm.-atm. Unfortunately the data available do not permit the extrapolation to zero pressure but the measurement was made at only 1 mm. pressure and B is thus likely not to be far different from the true value of A. ν_3 is doubly degenerate, and each mode can be regarded as contributing half of this amount. Inserting this value into equation (8) we get:

$$|\mu_3| = |\mu_3'| = 1.10 \times 10^{-19} \text{ e.s.u.} \quad *$$

It must be appreciated that this is liable to be considerably underestimated, if only because the measurements were made at very small total pressure, which would almost certainly be insufficient adequately to broaden the rotational fine structure of the spectrum.

6. Estimation of Oscillating dipole Amplitudes.

The other transition moments required cannot be estimated directly from spectral data, since the fundamental frequencies do not fall within the range investigated by Scruby

---

* μ_3' is the moment associated with $\nu_{3'}$, the mode which is degenerate with ν_3.

et al. They have been evaluated, and that for ν_3 checked, by calculating first the amplitude of distortion of the molecule undergoing the appropriate vibration, and then estimating the net dipole moment which this would represent.

(i) Estimate of the Intrinsic B-Cl Bond Dipole.

Pauling (44) gives an approximate relationship between his "electronegativity" values and bond dipole, from which one can estimate a value of 1.0 D. for B-Cl.

(ii) Determination of Amplitudes of Oscillation.

From consideration of symmetry, and by making assumptions about the nature of the interatomic force, it is possible to determine the form of the normal vibrations of a molecule, and the contributions of the various symmetry co-ordinates to each. Knowing the atomic masses, and the zero point energies of vibration, it is also possible to estimate the amplitude of the vibrations (i.e. the extent of the excursions of each of the atoms from their equilibrium positions). This type of calculation, developed in some detail by Herzberg(45) is, admittedly, a very classical picture of the process, although, of course, it accepts and utilises the quantization of vibrational energy, and, in particular, assumes one half-quantum of zero-point energy as the basis of calculation of the ground state amplitude. Its justification is that for atomic, as opposed to electronic processes, there is very much less uncertainty of position of the "oscillating" particle; without

a knowledge of the molecular wave-functions for BCl_3 little else could anyway be attempted.

For ν_2, the out-of-plane oscillation, this calculation is simple, since only one symmetry co-ordinate, S_2, is involved. One can calculate in this way that the maximum amplitude of S_2 in the zero point vibration is 1.45×10^{-10}cm. This gives a height for the pyramid of 1.68×10^{-9}cm. Assuming that the very slight lengthening of the B-Cl bonds has negligible effect on their dipole moment, the effective amplitude of the oscillating moment will be

$$\frac{1.68 \times 10^{-1}}{1.75} \times 3 = 0.288 \text{ D.}$$

(B-Cl bond length = 1.75 Å)

A similar calculation has been made for ν_3, although here two symmetry co-ordinates, S_3 and S_4, contribute. S_3 makes up more than 2/3 of the amplitude of vibration, and, in any event, S_4 is not influenced by isotopic substitution; only S_3 need therefore be considered. The amplitude of S_3 is found to be 0.5552×10^{-10}cm.

The calculation of resultant dipole moments from amplitudes in this case require some assumption as to the variation of moment with bond length and angle. In fact, the resultant moment is comparatively insensitive to the assumption made, and that finally adopted involves placing formal charges, of magnitude sufficient to give the 1.0 D. intrinsic bond moment, on the B and Cl atoms, and to assume that these do not vary

during the oscillation. In this way, a value for $\mu_3 = \mu_3' =$ 0.103 D. is obtained. The agreement with the value calculated from absorption data (0.110 D) is probably fortuitous but justifies some confidence in the essential soundness of the method.

7. Calculation of Interaction Energy.

By analogy with London's treatment (see, for example ref. 37) of "optical" dispersion forces, we can write

$$U = (\alpha \sum_i \mu_i^2) \sum \frac{1}{R^6}$$

where U is the isotope-dependent part of the "infra-red" dispersion energy, α is the polarisability of a BCl_3 molecule assumed due essentially to the chlorine atoms (α = 1.38 cc./mole of Cl (46)), μ_i is the amplitude of the oscillating dipole moment, for the ith mode of vibration, neglecting those modes which show no significant isotope shift, and R is the intermolecular distance, and the summation here extends over all the "neighbours".

For $^{11}BCl_3$, for which the calculations in the previous sections have been made, we can then evaluate

$$U = \frac{3 \times 1.38 \times (0.288^2 + 2 \times 0.103^2) \times 10^{-36} \times 10}{10^{-48} \times R_{eff}^6 \times 4.2 \times 10^7} \text{ cal/mole}$$

$$= \frac{1.03 \times 10^5}{R^6} \text{ cal/mole. - Å}^6.$$

Here we have allowed for a conventional 10 nearest neighbours. From this we need to estimate ΔU, the difference between the

interaction energies of $^{11}BCl_3$ and $^{10}BCl_3$ with their respective environments, which will arise from the change in μ on isotopic substitution. Reference to the equation of motion for the BCl_3 molecule shows that the amplitude of oscillation increases by almost exactly 2% on substituting ^{10}B for ^{11}B, and it is reasonable to assume an equal percentage change in μ. Since U contains μ as the second power, we can say

$$\Delta U = U^{10} - U^{11} = 0.04\, U^{11}$$

$$= \frac{4.15 \times 10^3}{R^6_{eff.}} \text{ cal/mole} - \text{Å}^6$$

This we have to equate to the configurational energy difference term previous deduced (VIII, p.71), which will be RT ln(1.013) = 7.4 cal/mole, whence we obtain

$$\underline{R_{eff.} = 2.87\ \text{Å}}$$

It remains to discuss the reasonableness of this value. The difficulty in this, of course, is to get a reliable estimate of the effective (reciprocal sixth-power) distance in the liquid. Data are available for solid BCl_3 (Rollier and Riva (47)), and one can assume that the liquid has local structure similar to that for the crystal (and it is, of course, only the local structure that matters, on account of the short-range nature of the dispersion forces). In this case the effective distance between a boron atom and

its neighbouring (unbonded) chlorines is 3.80 Å.

The very approximate nature of this calculation hardly needs to be stressed, but nevertheless the fact that these two values are of the same order of magnitude would seem to justify a certain measure of confidence in the accuracy of the assumption on which it is based.

One factor has been omitted, for want of evidence to support its inclusion: both BH_3 and $AlCl_3$ show very strong tendencies towards dimerisation (in fact the B_2H_6 molecule does not show any perceptible splitting at room temperature), giving a bridged structure:

e.g. 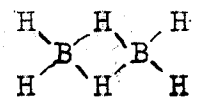

It is not inconceivable that in liquid BCl_3 a small proportion of the molecules are associated in some similar dimer, and, this would, of course, considerably reduce the effective intermolecular distance, on account of the weight given to small distances by the inverse-sixth-power dependence.

It seems clear that at least a semi-quantitative agreement between experiment and calculation has been established, and that in the calculation of vapour pressure ratios from spectral data, care must be taken to assess the importance of the differences in configurational energies between the two isotopes. When the frequencies in the condensed phase obey

the Teller-Redlich rule exactly, one can infer the absence of such interferences; for other cases, the procedure outlined in this discussion is though to have general application. It appears, at least, to provide an adequate explanation of the results in the only case for which reasonably full experimental data are available.

REFERENCES.

1. Briscoe, H.V.A. & P.L.Robinson, J.C.S., 127, 700, (1925)

   Briscoe, H.V.A., Robinson, P.L. & G.E.Stephenson, J.C.S., 128, 70, (1926)
   Briscoe, H.V.A., Robinson, P.L. & H.C.Smith, J.C.S., 129, 282 (1927)

2. Thode, H.C., Macnamara, J., Lossing F.P. & C.B.Collins, J.A.C.S., 70, 3008, (1948)

3. Watson, W.W., Bucannan, J.O., & F.K.Elder, Phys. Revs., 71, 887, (1947)

4. Yates, E.L., Proc. Roy. Soc., A 168, 148, (1938)

5. A.E.R.E., Radioactive Materials & Stable Isotopes Catalogue, No.2, Oct. 1950, p.111.

6. Urey, H.C. & D. Rittenberg, J.Chem. Phys., 1, 137, (1933).

7. Farkas, A., & L.Farkas, Proc. Roy. Soc., A.144, 467, (1934)

8. Urey, H.C., J.C.S. (1947), 562.

9. Kirschenbaum & Urey, J. Chem. Phys, 10, 706, (1942)

10. Thode, H.G., J.A.C.S., 62, 1581, (1940).

11. Kirschenbaum & Urey, J. Chem. Phys.,10, 706,(1942)

12. Riesenfeld & Chang, Z. Physikal Chem. 33B, 127, (1936)

13. Miles & Menzies, J.A.C.S., 58, 1068, (1936)

14. Farkas, A., "Light and Heavy Hydrogen"(Cambridge University Press), 1935, p.169.

15. Cohen, K., J.Chem. Phys. 8, 588, (1940)

16. Dixon, O.G., J.Soc. Chem. Ind., 68, 88,(1949)

17. Reed, T.M., & M.R.Fenske, Ind. Eng. Chem., 42, 654,(1950)

18. Ward, C.C., U.S. Bureau of Mines, Technical Paper, 600, (1939)

19. Podbielniak, W.I., Ind. Eng. Chem., Anal. Ed., 13,639,(1941)

20. Rose, A. & E.Rose, "Technique of Organic Chemistry" Vol. IV,(1951), p.69

21. Glasebrook, A.L. & F.E.Williams, "Technique of Organic Chemistry", Vol.IV.(1951), p.238.

22. Williams, F.E., "Technique of Organic Chemistry" Vol. IV, (1951), p.302.

23. Fay,J.W.J., Ann. Report Chem. Soc. XL, 243,(1943)

24. Nickels, Ind. Eng. Chem. (paper by Fenske), 30, 300, (1938)

26. Buck, A.C., J.Chem. Ed., 21, 475, (1944)

27. I.C.I. Private Communication.

28. Dixon, O.G., I.C.I. Report "Standard Analytical Stills for Laboratory Use".

29. Shafran, I.G., Russian Patent 51438, (1938)

30. Stock, A., "Hydrides of Boron and Silicon", Cornell University Press, 1933.

31. Briscoe, H.V.A., Andersen, J.S., Purcell, R.H., Pearson,T.G., King, A., James, F.W., & H.S.Emeléus, J.C.S. (1937), 1492.

32. Stock,A., & O.Priess, Ber., 47, 3109 (1914).

33. Osberghaus, O., Z. Physik, 128, 366, (1950)

34. Fisher ,R.A., "Statistical Methods for Research Workers" (Oliver & Boyd; 1944)

35. Redlich, O.Z. Physic. Chem. B.28, 371, (1935)

36. Hornig, D.F., Disc. Farad. Soc., No.9, 115, (1950)

37. London, F., Trans. Farad. Soc., 33, 8, (1937)

38. See for example, Mayer & Mayer, "Statistical Mechanics", p.320. (Wiley: New York,1940)

39. Bigeleisen, J. & Mayer, M.G., J.Chem. Phys.,17,261, (1947)

40. Anderson, T.F.,Lassettre, E.N. & D.M.Yost, J. Chem. Phys. 4, 703,(1936)

41. Hoffman, Dissertation. (Brown University, 1949) quoted by Hornig, ref. 36.

42. Wilson, E.B., Thorndike, A.M., & A.J.Wells, J.C.P., 15, 157, (1947)

43. Scruby, Lacher & Park, J.C.P., 19, 386, (1951).

44. Pauling, L., "The Nature of the Chemical Bond", (Cornell University Press) 1945.

45. Herzberg, G., "Infra-red and Raman Spectra", Vol. II, (van Nostrand), 1945.

46. van Vleck, J.H., "Theory of Electric and Magnetic Susceptibilities", (O.U.P.) 1932.

47. Rollier, M.A., & Riva, A., Gazz. Chim. Ital. 77, 361, (1947).

ACKNOWLEDGEMENTS.

My thanks are due to Professor F.A.Paneth, F.R.S., for permission to work at the Londonderry Laboratories for Radiochemistry, and for the facilities he has provided.

I would like to record my deepest thanks to G.R.Martin, B.Sc., A.R.I.C., for constant encouragement and guidance given to me during the past three years.

It is with great pleasure that I take this opportunity to thank Dr. L.Tordai, for manyinspiring discussions on the interpretation of the results obtained from this work.

My thanks are due to Dr. Palmer, A.E.R.E., Harwell, for obtaining the mass spectrometric data quoted in this thesis.

Finally I would like to thank my parents for continued encouragement and generous financial assistance.